planika
NET ZERO FIREPLACES

FIRE LINE AUTOMATIC 4+ (1490mm)

AUTOMATIC BEV® BURNER

Net Zero fireplace with the BEV Technology®

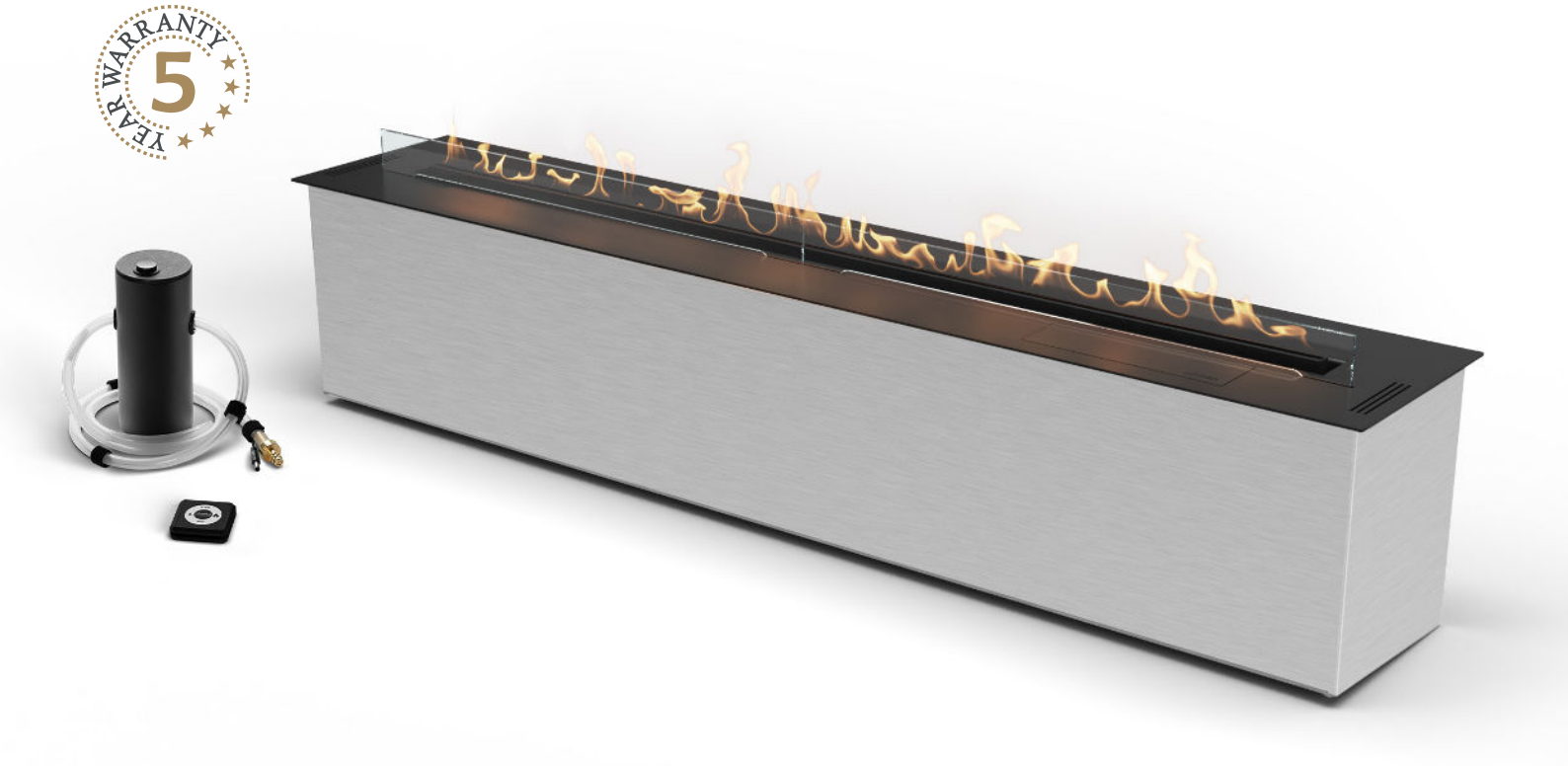

AUTOMATIC BEV® BURNER

The BEV Technology® guarantees burning that is free of smoke, odor, or ash. This technology creates a flame by burning ethanol vapors, ensuring that the fire has no direct contact with the liquid fuel.



REMOTE CONTROL

Easily control your fireplace with the handy remote. You're in charge of the flames. Go for one of 6 flame levels to adjust the ambience and coziness to your needs.



AUTOMATIC REFILLING

The automatic pump communicates with the device, delivering the necessary amount of fuel. There is no risk of overfilling the tank or spilling the fuel.



TOUCH CONTROL PANEL

Experience the ultimate convenience with the LCD touch control panel. Easily adjust the fireplace settings, check fuel levels, or set a shut-off timer. Additionally, the child lock feature ensures safety for the youngest users.



MOBILE APP

A fireplace controlled by an app offers the convenience of adjusting flame settings and ambiance remotely, enhancing comfort and ease of use.



OPTIONAL DECORATIVE LOGS

Enhance your fireplace's aesthetic wit our optional trays with new decorative logs, adding a touch of elegance and warmth to any room.

All product specifications and data are subject to change without notice and are believed to be accurate as of the date hereof. Planika Sp. z o.o., its affiliates, agents, and employees, and all persons acting on its or their behalf (collectively, "Planika Sp. z o.o."), disclaim any and all liability for any errors, inaccuracies or incompleteness contained in any document or in any other disclosure relating to any product. To the maximum extent permitted by applicable law, Planika Sp. z o.o. disclaims any and all liability arising out of the application or use of any product. No license, express or implied, by estoppel or otherwise, to any intellectual property rights is granted by this document or by any conduct of Planika Sp. z o.o.. Customers using or selling Planika Sp. z o.o.'s products not expressly indicated for use in such applications do so entirely at their own risk and agree to fully indemnify Planika Sp. z o.o. for any damages arising or resulting from such use or sale. The provided fuel consumption is based on laboratory testing on the lowest flame level. The actual consumption of individual devices may vary. The images are indicative only.

© Copyright 2025, Planika Sp. z o.o. All rights reserved.

planika
NET ZERO FIREPLACES

Fire Line Automatic 4+ (1490mm)
(BEV Technology®)

Fuel tank capacity	26.8 L | 7.08 gal
Maximum burn time	30 hours
Maximum heat output	13.0 kW | 44 358 BTUs/h
Minimum room cubature	130 m^3 | 4591 ft^3
Flame height regulation	6 stages
Weight	52.5 kg | 13.9 lbs
Fuel type	bioethanol 95 - 96,6%
Flue	not required
Air change rate	1 space volume per hour
Power supply	230 V | 115 V
Finish	black powder coating
Materials	steel, galvanized steel, tempered glass
Application	for indoor use only

CONTROL OPTIONS

included | included | optional

'PLANIKA BEV' APP

Control the fire with your smartphone!

GET IT ON Google Play | Available on the App Store



Freestanding, Room Divider, Tunnel and Island housings require FLA4 with Frame & Glass Panels

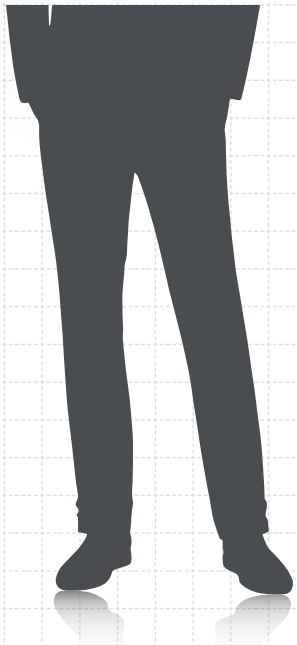

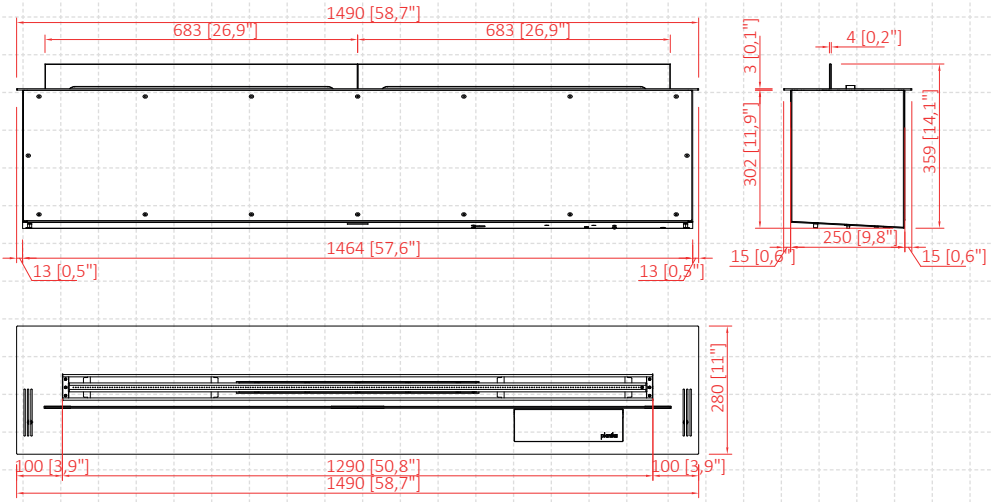

custom burner finish in RAL palette colour

custom length available on request

All product specifications and data are subject to change without notice and are believed to be accurate as of the date hereof. Planika Sp. z o.o., its affiliates, agents, and employees, and all persons acting on its or their behalf (collectively, "Planika Sp. z o.o."), disclaim any and all liability for any errors, inaccuracies or incompleteness contained in any document or in any other disclosure relating to any product. To the maximum extent permitted by applicable law, Planika Sp. z o.o. disclaims any and all liability arising out of the application or use of any product. No license, express or implied, by estoppel or otherwise, to any intellectual property rights is granted by this document or by any conduct of Planika Sp. z o.o.. Customers using or selling Planika Sp. z o.o.'s products not expressly indicated for use in such applications do so entirely at their own risk and agree to fully indemnify Planika Sp. z o.o. for any damages arising or resulting from such use or sale. The provided fuel consumption is based on laboratory testing on the lowest flame level. The actual consumption of individual devices may vary. The images are indicative only.

© Copyright 2025, Planika Sp. z o.o. All rights reserved.