Mini Zara, Zara, Grand Zara and XL Zara Electric Fire Range

OWNERS MANUAL



Model Numbers: MZEZAWHBL42, MZEZAWHBL50, MZEZAWHBL60, MZEZAWHBL72

AC 220-240V, 50Hz 1400-1600W

⚠ **WARNING**	**Please read** the entire owner's manual, including **all safety information**, before **plugging in** or **using** this product. Failure to do so could result in **fire, electric shock, or serious personal injury.**

⚠ **CAUTION**	**Keep the owner's manual** for future reference. If you sell or give this product away, **make sure this manual accompanies this product**.

@ezeeglow

@ezeeglowelectricfires

Be sure to upload your fire image using #ezeeglow and tag Ezee Glow on Facebook or Instagram to feature on our social media!

Rev G

IMPORTANT SAFETY INFORMATION!

⚠ WARNING

When using electrical appliances basic precautions should always be followed to reduce the risk of fire, electric shock and injury to persons, including the following:

- Read all instructions before using this heater.
- This heater is hot when in use. To avoid burning, do not touch the hot surface. If provided, use handles when moving this heater. Keep combustible materials, such as furniture, pillows, bedding, paper, clothes, and curtains at least 1 m from the front of the heater and keep them away from the sides and rear. In order to avoid overheating, do not cover the heater.
- Extreme caution is necessary when any heater is used near children or the infirm and whenever the heater is left operating and unattended.
- Always unplug heater when not in use.
- Do not operate any heater with a damaged cord/ plug, after the heater malfunctions or has been damaged in any manner. Return heater to authorized service facility for examination, electrical/ mechanical adjustment, and repair.
- Indoor use only, do not use outdoors.
- This heater is not intended for use in bathrooms, laundry areas or similar indoor locations. Never locate heater where it may fall into a bathtub or other water container.
- Do not run cord under carpeting. Do not cover cord with throw rugs, runners, or similar coverings. Arrange cord away from traffic areas, where it will not be tripped over.
- To disconnect heater, turn controls to off, then remove plug from outlet.
- Do not insert objects into any ventilation or exhaust openings, as this may cause an electric shock, fire, or damage to the heater.
- To prevent a possible fire, do not block air intakes or exhaust in any manner. Do not use on soft surfaces like a bed, where openings may become blocked.
- The heater has hot, arcing parts inside. Do not use it in areas where flammable liquids are used/ stored.
- Use this heater only as described in the manual. Any other use not recommended by the manufacturer may cause fire, electric shock or injury to persons.
- DANGER - HIGH Temperatures may be generated under certain abnormal conditions. Do not partially or fully cover/ obstruct the front of this heater.
- Do not install heater directly below a power socket outlet.
- This appliance can be used by children aged from 8 years and above and persons with reduced physical, sensory or mental capabilities or lack of experience and knowledge if they have been given supervision or instruction concerning use of the appliance in a safe way and understand the hazards involved. Children shall not play with the appliance. Cleaning and user maintenance shall not be made by children without supervision. Children of less than 3 years should be kept away unless continuously supervised.
- CAUTION: In order to avoid a hazard due to inadvertent resetting of the thermal cut-out, this appliance must not be supplied through an external switching device, such as a timer, or connected to a circuit that is regularly switched on/ off by the utility.

IMPORTANT SAFETY INFORMATION!

⚠ WARNING

WARNING: This heater is not equipped with a device to control the room temperature. Do not use this heater in small rooms when they are occupied by persons not capable of leaving the room on their own, unless constant supervision is provided.

· CAUTION — Some parts of this product can become very hot and cause burns. Particular attention must be given when children and vulnerable people are present.

ELECTRICAL CONNECTIONS – UK PLUG WIRING INSTRUCTION

- If the plug must be changed because it is not suitable for your socket, or due to damage, please follow the wiring instructions shown below.
- **The wires in the mains lead are coloured in accordance with the following code:**

  BROWN: LIVE (L)

  BLUE: NEUTRAL (N)

  GREEN/YELLOW: EARTH (E)

  As the colours of the wires in the mains lead of this appliance may not correspond with the coloured markings identifying the terminals in your plug, please see below:

- The BLUE wire is the NEUTRAL and must be connected to the terminal which is marked with the letter N or coloured BLACK.
- The BROWN wire is the LIVE and must be connected to the terminal that is marked with the letter L or coloured RED.
- The GREEN/YELLOW must be connected to the terminal which is marked E or the earth symbol or coloured GREEN or GREEN/YELLOW.
- Always ensure that the cord grip is positioned and securely fastened.
- **WARNING**: THIS APPLIANCE MUST BE EARTHED.
- ***If a 13A (BS1363) fused plug is used it must be fitted with a BS1362 13A fuse. If in doubt consult a qualified electrician.***

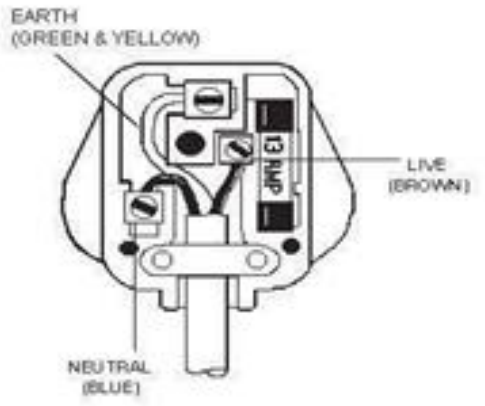

Install preparation

This product includes a **GLASS panel.** Use **extreme caution** when **handling.** Failure to do so could result in **personal injury** or **property damage**.

Remove all parts and hardware from the carton and place them on a clean, soft, dry surface. Check the parts list to make sure you have all the parts you need. Please recycle all packaging material at your local recycling center.

You will need the following tools (not included): Phillips screwdriver, stud finder, spirit level, tape measure, electric drill and drill-bit set.

Parts and Hardware

<table>
<tr><td rowspan="2">
A – Electric fire</td><td></td><td>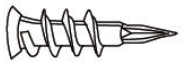</td></tr>
<tr><td>**B** – Wood Screws</td><td>**C** – Drywall anchors</td></tr>
<tr><td colspan="2">
D- Remote Control</td></tr>
<tr><td>
E – Wall bracket</td><td>
F- Decorative Log-set</td><td>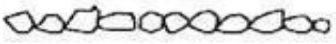
G – Decorative Pebbles</td></tr>
<tr><td>
H – Fuel-bed tray</td><td>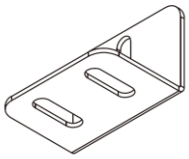
I- ‘L shape’ metal bracket</td><td></td></tr>
</table>

Dimensions

Product dimensions listed in mm and [inches].

Mini Zara:

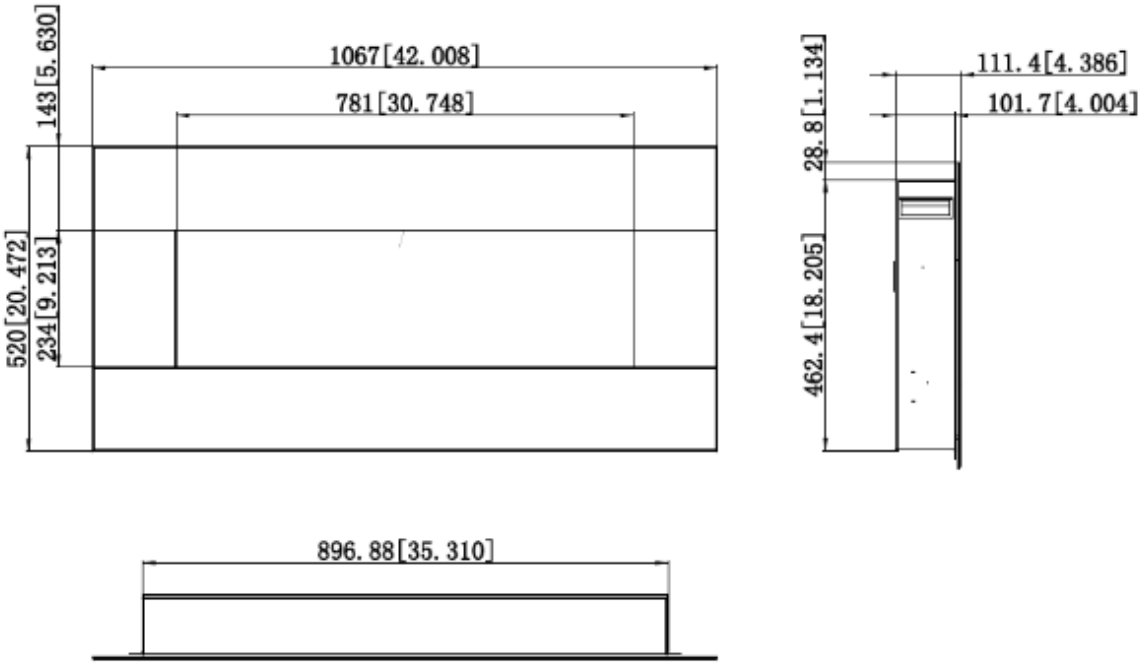

Zara:

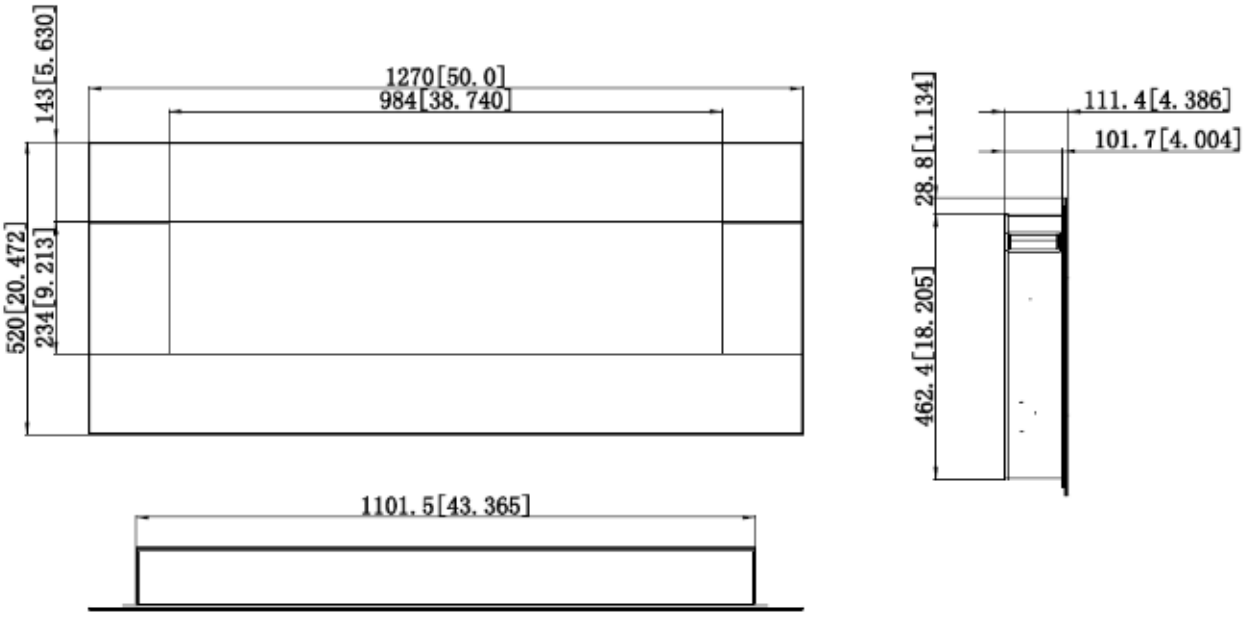

Grand Zara:

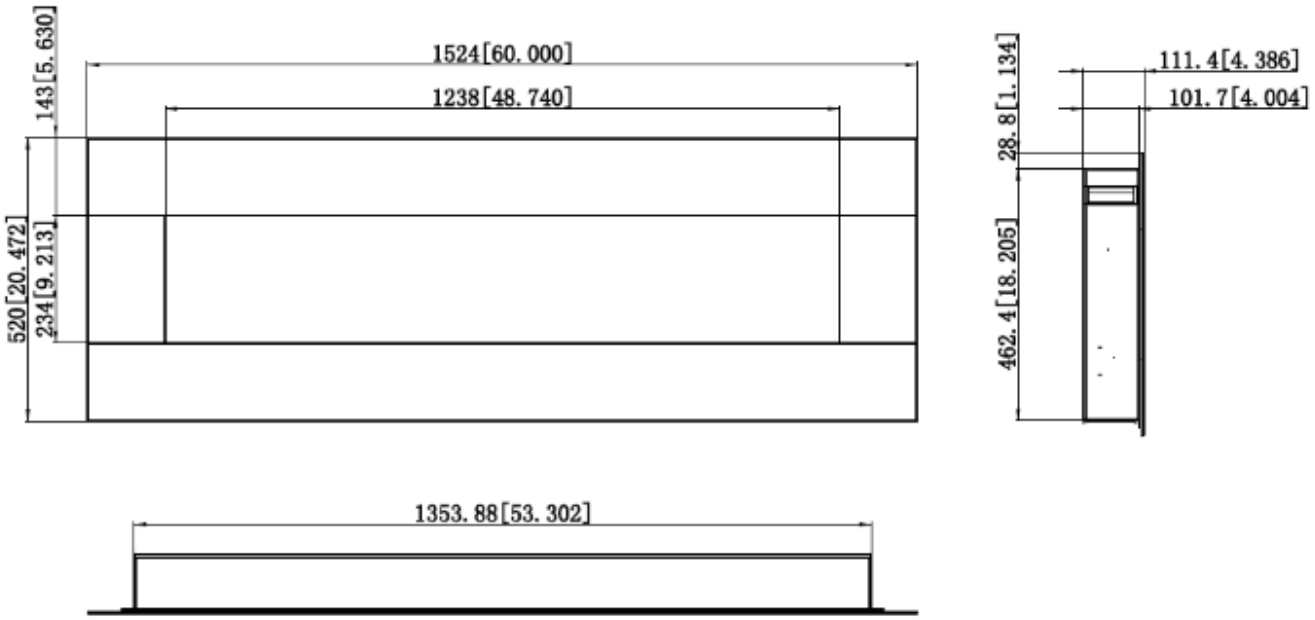

XL Zara:

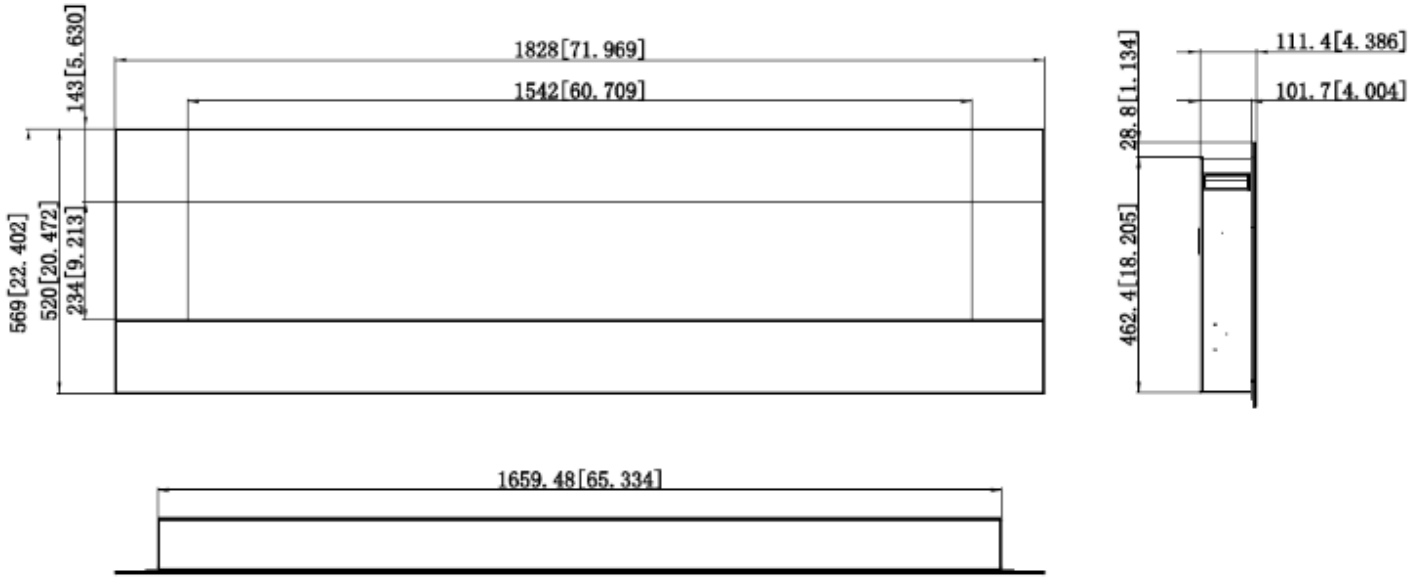

Installation Overview

Wall Mounted Installation

Rear View of Fireplace

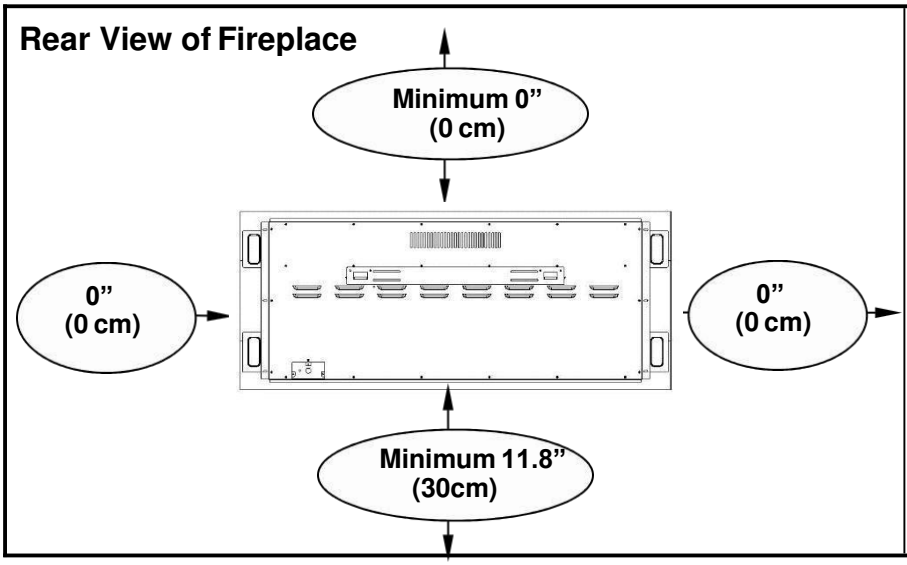

Find a safe location:

Minimum clearance on each side:

0” (0cm).

Minimum clearance below: 11.8” (30cm).

Minimum clearance above: 0” (0cm).

Minimum clearance from the front: 3 feet (90 cm).

Choose a location near an outlet so an extension cord is not required.

DO NOT position the unit **directly below** a power outlet.

See **Safety Information** on **pages 2 and 3** for warnings about **safe placement, safe installation,** and **proper use** of this product.

NOTICE	The wall mount fasteners included with this fire are for use ONLY with a wood-framed wall covered in drywall. For concrete walls, cinder blocks, or other wall types, consult a professional for the best attachment methods.

NOTICE	Due to the additional weight, the **XL Zara** must be wall mounted using the **two wall brackets** provided.

ALWAYS unplug this fire heater **before assembly, cleaning, or before relocating.** Failure to do so could result in **electric shock**, **fire**, or **personal injury**.

AVOID INJURY and DAMAGE! Three screws need attached **directly into wall studs** and additional screws must be **attached using drywall anchors to assist**.

Due to the many different materials used on different walls, it is highly recommended that you consult a competent tradesman before you install this appliance on the wall.

A. Select a location that is not prone to moisture and is located **at least 36" (914mm) away from combustible materials** such as curtain drapes, furniture, bedding, paper, etc.

B. Have two people hold the appliance against the wall to determine the final location.

C. Place unit face down on a soft, non-abrasive surface. Remove the wall bracket(s) from the back of the unit by removing the relevant screws.

D. Mark out bracket(s) location using a spirit level to assist, then mount the bracket(s) to the wall using the supplied screws. The bracket(s) MUST have the hooks facing upward.

NOTE: It is strongly recommended that the wall bracket be screwed into wall studs where possible. If wall studs cannot be used, ensure that eight plastic anchors are used to affix each bracket to the wall and each bracket is adequately secured.

E. With the wall bracket(s) installed, lift the appliance, and guide the bracket hooks into the two (four for XL Zara) slots on the back of the appliance.

F. Check the appliance for stability ensuring that the bracket(s) will not pull free from the wall. Finally, skip to page 10 and carry out the L-bracket install to finish wall installation.

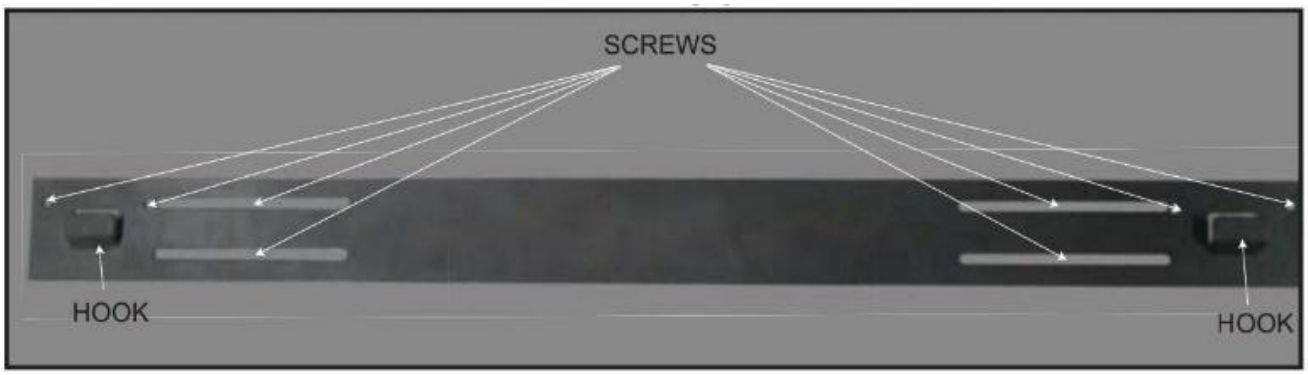

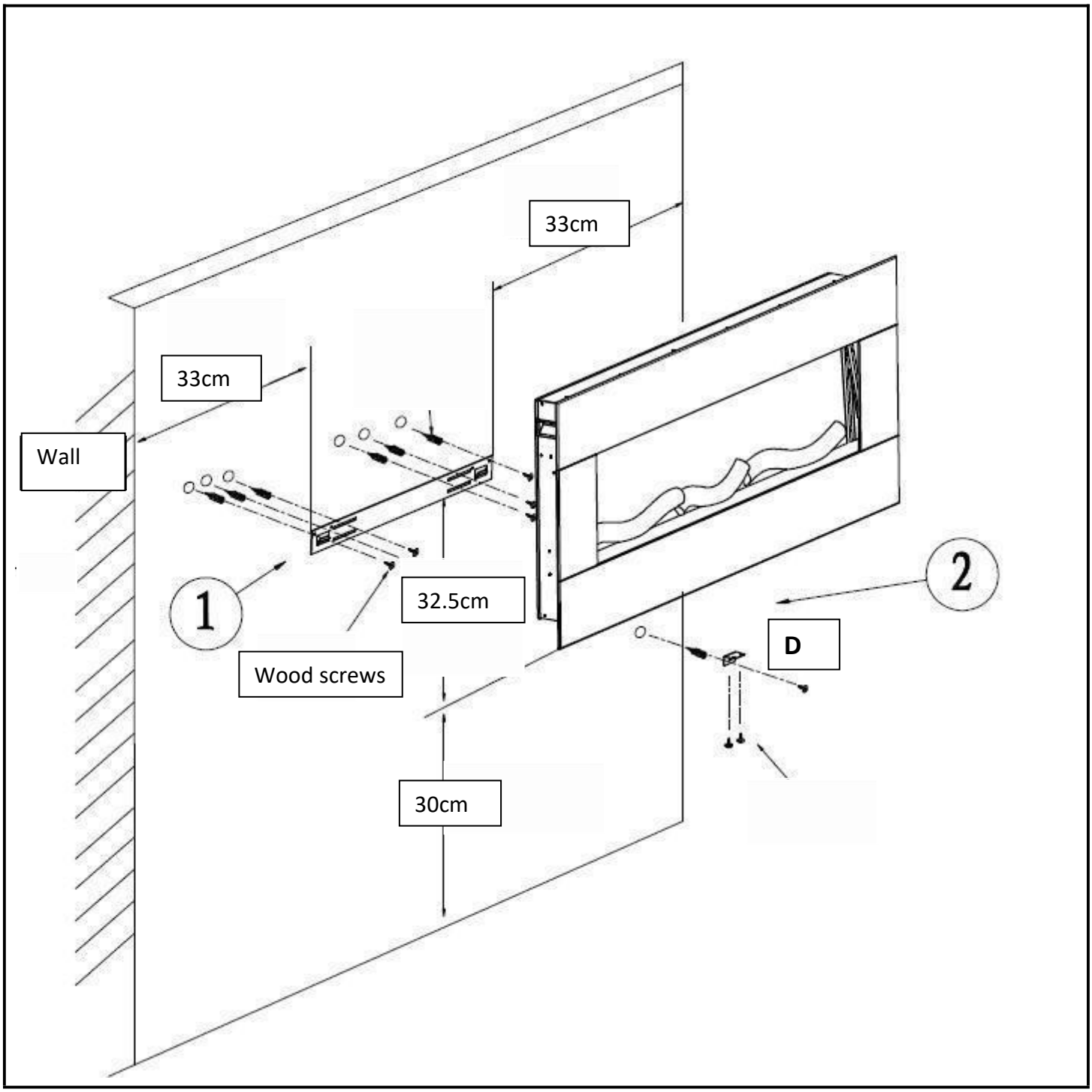
33cm
33cm
Wall
1
32.5cm
Wood screws
2
D
30cm

Wall Securing Bracket Installation

Following wall bracket installation, the small “L” shape mounting bracket **(page 6 – item ‘D’)** needs attached to secure the fire to the wall. See below guide and illustration:

G. Remove the two screws on the bottom of the fire box, then grab the L-shape mounting bracket.

H. Attach one side of the bracket to the bottom of fire using two screws, attach the other side to the wall using one **Drywall anchor (C) & screw (B)** to secure the fire to the wall.

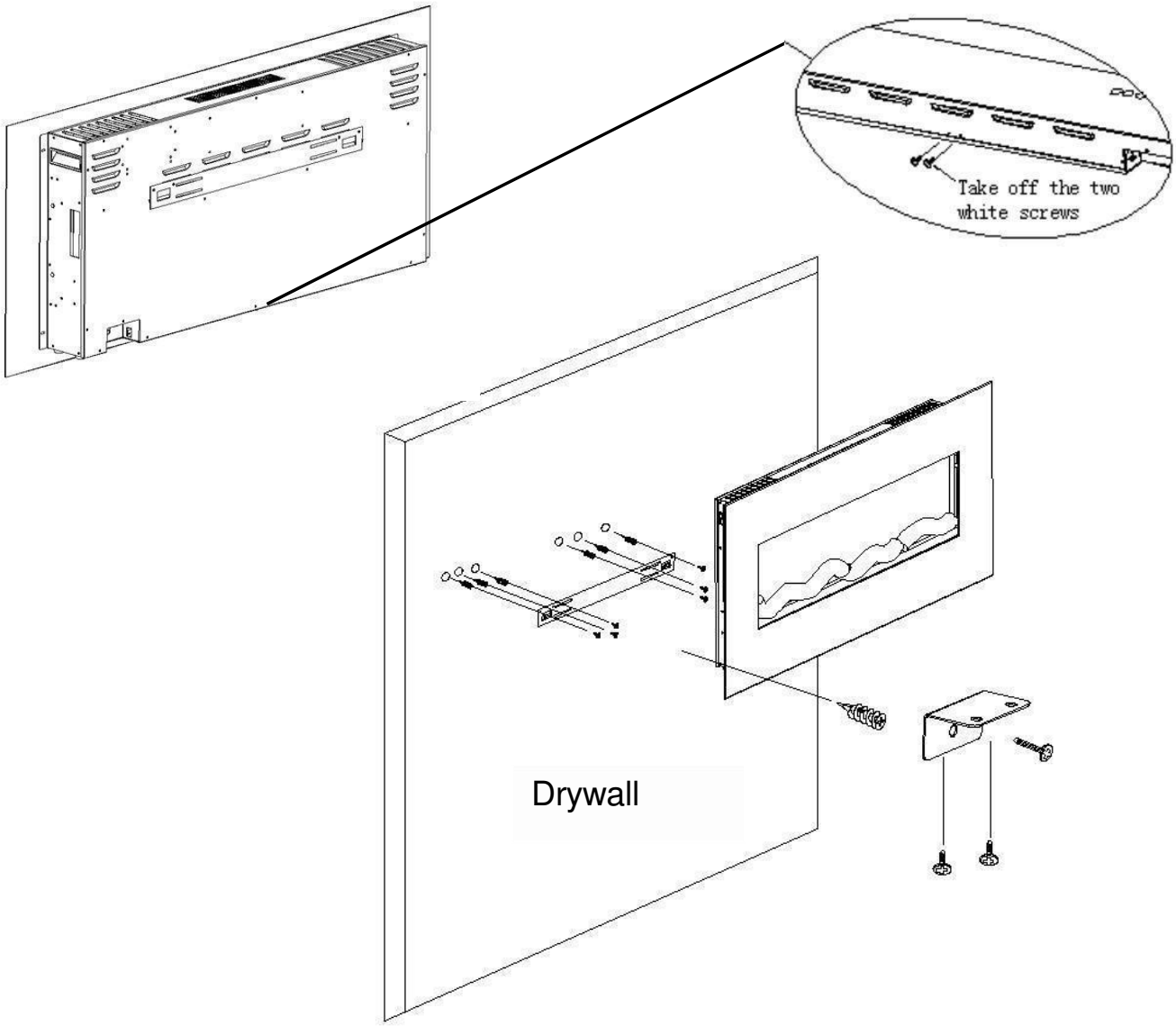

WALL RECESS INSTALLATION

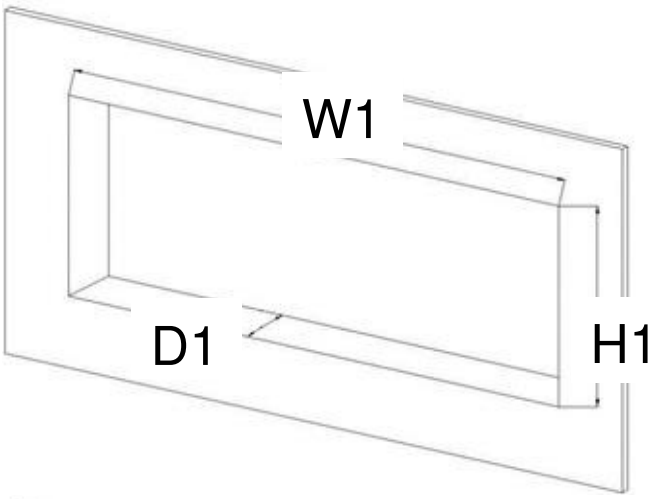

(A) Wall recess dimensions

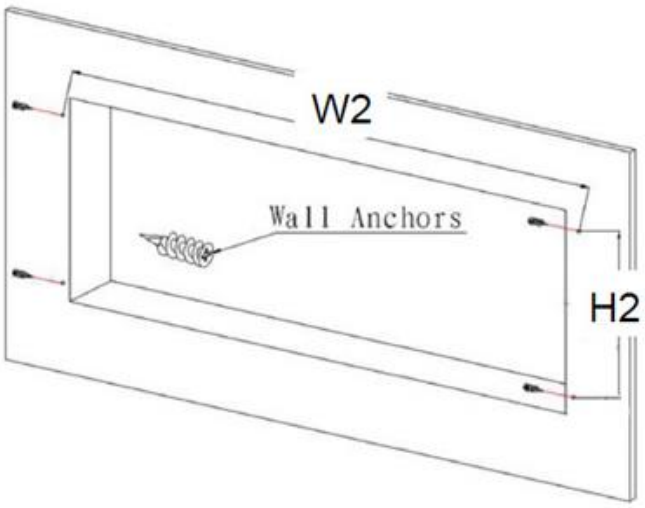

(B) Wall anchor locations

STEP A. Select a dry wall for fire recess. Select recess size using the illustration above and the corresponding columns W1, H1 and D1 below:

Product Name	W1	H1	D1	W2	H2
Mini Zara	90.5cm	48.26cm	12cm	92.5cm	40cm
Zara	111cm	48.26cm	12cm	113cm	40cm
Grand Zara	136.2cm	48.26cm	12cm	138.2cm	40cm
XL Zara	166.8cm	48.26cm	12cm	168.8cm	40cm

Note – Ensure there is at least a 1.5cm gap between top of the fire box and top of recess, for adequate ventilation.

STEP B. Mount four wall anchors in each corner of the wall using the illustration above and the corresponding columns W2 and H2 above.

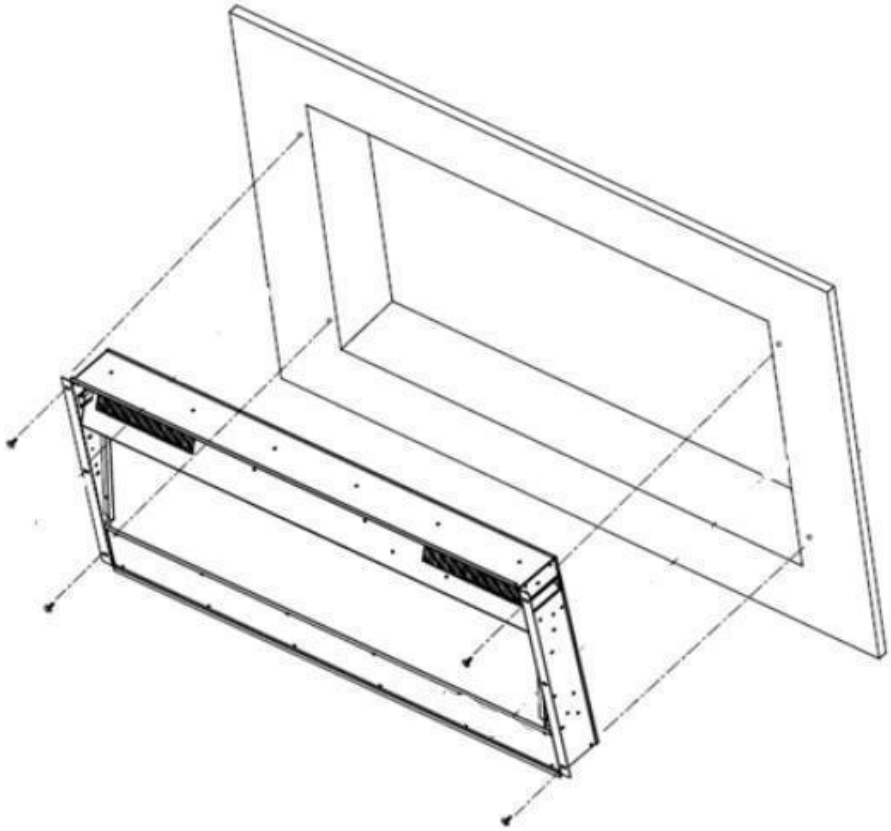

STEP C. Lift the fire into the recess and attach four screws through the holes in the corners of the fire, into the previously fitted dry wall mounts. The fire is now secured to the wall.

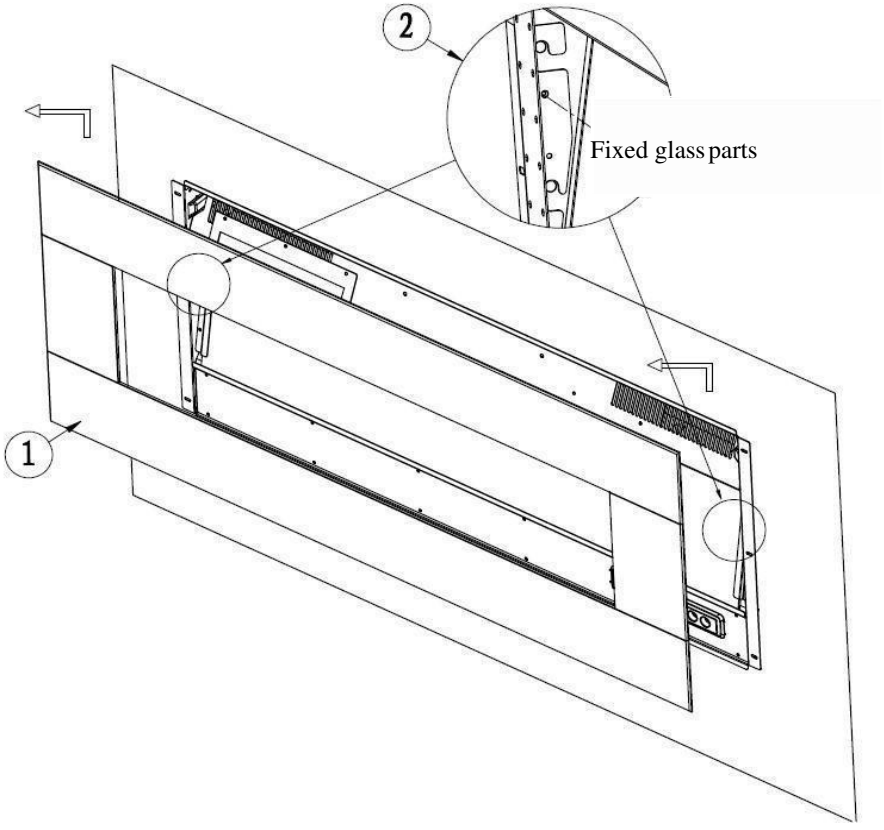

STEP D. Next, attach the front glass by lifting it flush against the fire and locating the hooks on the back of the front glass, on to the inside catches of the fire, see figure to the left, detail view 2 for illustration.

Fuel-bed Effect Installation

Note:
The appliance must be installed in its final location before the crystals or artificial logs are installed.

A. For both options, the front glass must be removed, and the appliance mounted in its final location before the log effect or pebbles are installed. Simply remove the two silver-coloured screws on each side of the fire and lift the front glass up then out to remove it. Set it aside for later.

B. Next, the clear glass screen needs removed. Pay attention to each side of the glass screen, there's a metal bracket on each side with two screws each, these keep the glass screen in place. Remove the two screws on each side and remove the brackets, making sure to support the glass when removing the final screw. Simply pull the glass out and set it aside for later.

C. If you want your fire with the log effect, remove the log effect from its packaging and reverse the order of steps A and B, completing the fuel-bed installation, see Figure 1. If you prefer the pebble effect, remove the log effect from the fire and place the media tray holder (H) onto the bottom tray. Next, carefully place the pebbles (G) onto the bottom tray as illustrated below. Apply an even layer from side to side, see Figure 2 and Figure 3. Reverse the order of steps A and B, completing the fuel-bed installation.

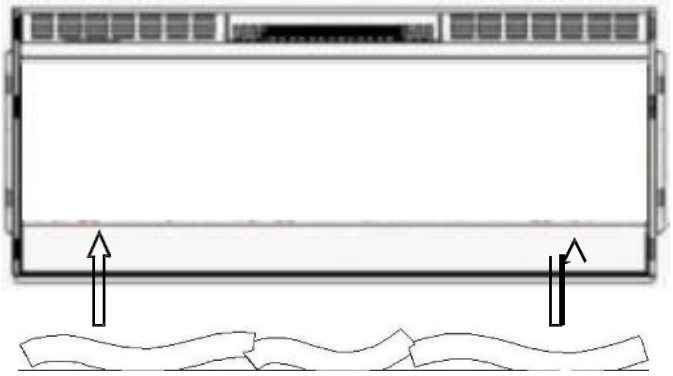

Figure 1.

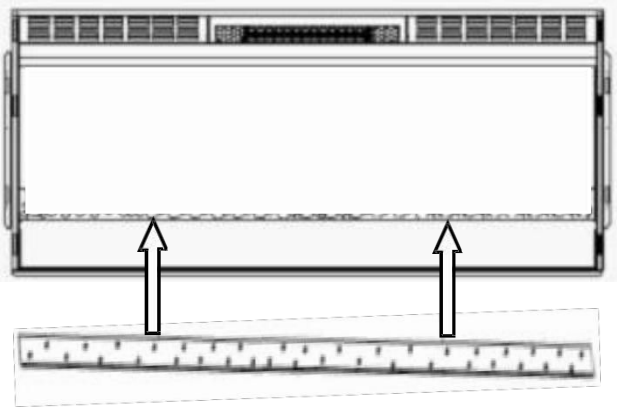

Figure 2.



Figure 3.

Operation

Please read the entire owner's manual, including **all safety information**, before **plugging in** or **using** this product. Failure to do so could result in **fire, electric shock, or serious personal injury.**

Power

Plug the power cord into a 220-240V 50Hz outlet (see **IMPORTANT SAFETY INFORMATION** on **Pages 2 and 3**). Make sure the outlet is in good condition and the plug is not loose. **NEVER** exceed the maximum amperage for the circuit. **DO NOT** plug other appliances into the same circuit.

Methods of Operation

The electric fire can be operated by the control panel located on the front of the unit or the remote control. **See figures below**.

Before operating, please review the **IMPORTANT SAFETY INFORMATION** on **Pages 2 and 3.**



Control panel

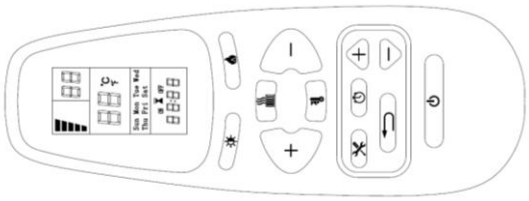

Remote control

Control Panel Operation

BUTTON	FUNCTION	ACTION & INDICATION
	**ON**: Enables control panel functions and remote control. Turns on flame effect. **OFF**: Disables control panel functions and remote control. Turns off flame effect.	1. **Press once**, Indicator light turns on. Power turns on. All functions enabled. 2. **Press again**, Flame effect turns off. Power and all functions turn off.
	**BRIGHTNESS button**: Adjusts brightness.	1. **Press once**, Indicator light turns on. Brightness changes. 1. **Press again,** until desired brightness is selected.
	**FLAME button**: Adjusts flame and fuel-bed colour. **NOTE:** Flame effect stays on until power button is turned off. Flame effect must be on for heater to turn on.	1. **Press once**, Indicator light turns on. Flame and fuel-bed colour changes. 2. **Press again**, until desired colour is selected.
	**HEATER button**: Turns heater on and off. **NOTE:** The heater only works when the flame effect is on. If the flame effect is off, the heater will not turn on. **NOTE:** To prevent overheating, the heater blows cool air for 10 seconds before the heater turns on, and after it turns off. **NOTE:** Heater overrides room temp control.	1. **Press once**, Indicator light turns on. Fan blows cool air for 10 seconds. Low heater (H1) turns on and blows warm air. 2. **Press again**, Indicator light remains on. High heater (H2) turns on and blows hot air. 3. **Press again,** Indicator light turns off. The fan blows cool air for 10 seconds, then turns off.
	**TIMER button:** Turns heat on for a certain time period.	1. **Press once,** Indicator lights up. Heat on time goes to 30 minutes. 2. **Press again,** until desired time length is reached.

Remote Control Operation

BUTTON	FUNCTION	ACTION & INDICATION
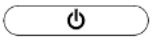	**ON**: Enables control panel functions and remote control. Turns on flame effect. **OFF**: Disables control panel functions and remote control. Turns off flame effect.	1. **Press once**, Indicator light turns on. Power turns on. All functions enabled. 2. **Press again**, Flame effect turns off. Power and all functions turn off.
	**FLAME button**: Adjusts flame and fuel-bed colour. **NOTE:** Flame effect stays on until power button is turned off. Flame effect must be on for heater to turn on.	1. **Press once**, Indicator light turns on. Flame and fuel-bed colour changes. 2. **Press again**, until desired colour is selected.
	**BRIGHTNESS button**: Adjusts brightness.	1. **Press once**, Indicator light turns on. Brightness changes. 2. **Press again,** until desired brightness is selected.
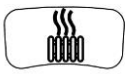	**HEATER button**: Turns heater on and off. **NOTE:** The heater only works when the flame effect is on. If the flame effect is off, the heater will not turn on. **NOTE:** To prevent overheating, the heater blows cool air for 10 seconds before the heater turns on, and after it turns off. **NOTE:** Heater overrides room temp control.	1. **Press once**, Indicator light turns on. Fan blows cool air for 10 seconds. Low heater (H1) turns on and blows warm air. 2. **Press again**, Indicator light remains on. High heater (H2) turns on and blows hot air. 3. **Press again,** Indicator light turns off. The fan blows cool air for 10 seconds, then turns off.

TIMER SETTINGS ON REMOTE CONTROL

: **Timer:** Displays current day, time, and week. Press to enter or confirm timer settings.

: **Settings:** Press to move to next step. Press to confirm week timer.

: **Back:** Press to clear current settings. Press to return to the previous step.

: **Up and Down:** Press to increase/ decrease certain settings.

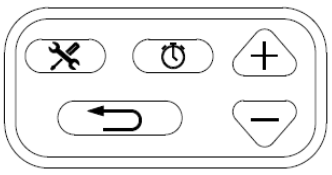

LCD Screen		
Weekday → Mon, Tues, Wed, Thurs, Fri, Sat, Sun **Time Display** → Current Time / Timer From 00:00 to 24:00 NOTE: 00-12:00 is AM / 13:00-24:00 is PM	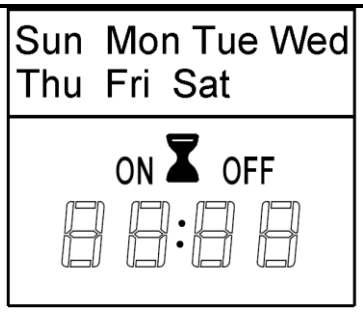	**Note:** The functions can only be adjusted when the related letters or digits are flashing. **Note:** Calibrate the timer to current time before entering the weekly settings.

	**THERMO-STAT button:** Turns heater on and off to maintain room at a certain temperature. **NOTE:** Press & Hold the button for 5 seconds, the temperature setting will switch from ℃ to ℉. Same way from ℉ to ℃.	1. **Press once,** Indicator lights up. Temperature goes to 18 ℃ 2. **Press again,** until desired setting is reached.

1 Set current day and time

1. Press once. When “MON” (Monday) begins flashing, use to select the current day.
2. Press . When the hour digits begin flashing, use to select the current hour.
3. Press again. When the minute digits begin flashing, use to select the current minute.
4. Press again. The current time is now set.

2 Set ON/OFF time and temperature on a weekly cycle

1. Press . When “MON” begins flashing, press 3 times. When “ON” begins flashing, use to select the desired hour and minute to turn on the heater. Press at any time to clear the digits and shut down “ON” timer.

note:
The timer can only be adjusted in 30-minute intervals (i.e. 00:00 - 00:30; 00:30 - 01:00, etc.)

2. Press . When “OFF” begins flashing, use to select the desired hour and minute to turn off the heater. **Press at any time to clear the digits and shut down “OFF” timer.**

3. Press again. When “18” begins flashing, use to select the desired temperature for Monday.

note:
If the temperature was previously set, those digits will be shown instead of “18”.

4. Press again. When “TUES” appears on the screen and “ON” begins flashing, use to select the desired hour and minute to turn on the heater for Tuesday.

5. Press again. When “OFF” begins flashing, use to select the desired hour and minute to turn off the heater for Tuesday.

6. Press again. When “18” begins flashing, use to select the desired temperature for Tuesday.

7. Repeat steps 1 to 6 to set the “ON/OFF” time and temperature for Wednesday, Thursday, Friday, Saturday, and Sunday.

8. Press or to finish, ensuring to aim the remote control at the receiver, located in the middle of the appliance. The appliance will “beep” once to confirm your settings have been saved successfully.

Open window warning

If the room temperature decreases by 10 degrees within 3 minutes, the appliance will assume there is an open window nearby. In order to conserve energy, the heater will automatically switch from High Heat to Low Heat, or if the heater is already at Low Heat, it will turn off completely.

When switching from High Heat to Low Heat, the appliance will beep 3 times and the digital display will flash “88” 3 times before displaying the existing heating status.

When switching from Low Heat to Off, the appliance will beep 3 times and the digital display will flash “88” continuously.

To reset the heating function, see “operating remote control” section.

NOTICE	When the heater is first turned on, a slight odour may be present. This is normal and won’t occur again unless the heater is un-used for a long period of time.

NOTICE	To improve operation, **aim** the remote control at the front of the fire unit. **DO NOT press the buttons too quickly**. Give the unit time to respond to each command.

Temperature Limiting Control

This heater is equipped with a Temperature Limiting Control. Should the heater reach an unsafe temperature, the heater will automatically turn OFF. To reset:

1. Unplug the power cord from the outlet.
2. Turn the ON/OFF switch on the CONTROL PANEL to OFF. **Wait 5 minutes.**
3. Inspect the fire unit and make sure all vents are free from dust or lint. If they are clogged, use a vacuum to clean the vent areas.
4. With the POWER switch in the OFF position, plug the power cord back into the outlet.
5. If the problem continues, have your outlet and wiring inspected by a professional.

Remote Control Battery Information

- This remote control uses **Two AAA batteries (NOT included).**

NEVER dispose of batteries in **fire.** Failure to observe this precaution **may result in explosion**. Dispose of batteries at your local hazardous material processing center.

Care and Maintenance

Cleaning



ALWAYS turn the heater **OFF** and **unplug the power cord from the outlet** before cleaning, performing maintenance, or moving the fire unit. Failure to do so could result in **electric shock, fire, or personal injury**.



NEVER immerse in water or **spray with water.** Doing so could result in **electric shock, fire, or personal injury.**

Metal:

- Buff using a soft cloth, slightly dampened with a citrus oil-based product.
- **DO NOT** use brass polish or household cleaners as these products will damage the metal trim.

Glass:

- Use a good quality glass cleaner sprayed onto the cloth or towel. Dry thoroughly with a paper towel or lint-free cloth.
- **NEVER** use abrasive cleansers, liquid sprays, or any cleaner that could scratch the surface.

Vents:

- Use a vacuum or duster to remove dust and dirt from the heater and vent areas.

Plastic:

- Wipe gently with a slightly damp cloth and a mild solution of dish soap and warm water. **NEVER** use abrasive cleansers, liquid sprays, or any cleaner that could scratch the surface.

Maintenance



Risk of electric shock! **DO NOT OPEN any panels. Contact retailer before conducting repair work.**



ALWAYS turn the heater **OFF** and **unplug the power cord from the outlet** before cleaning, performing maintenance, or moving the fire unit. Failure to do so could result in **electric shock, fire, or personal injury**.

Electrical and Moving Parts:

- The fan motors are lubricated at the factory and will not require lubrication.
- Electrical components are integrated in the fire unit and are not serviceable by the consumer.

Troubleshooting/ FAQ

Problem	Possible Cause	Solution	Note
Fire not turning on	Fire not plugged in or switched on at socket	Check plug is correctly fitted into socket and the socket is turned on.	If all solutions have been tested and problem persists, a new control panel is required.
	Fuse blown	Disconnect plug and inspect the fuse. Replace with a 13A fuse if broken.	
	Faulty control panel	If the controls do not work, press each control continuously one at a time. After a few cycles, the controls should recognize the input and work correctly.	
Noisy heater	Fan clogged	Remove the heating unit and remove dust from fan.	If all solutions have been tested and problem persists, a new heating element/ fan assembly is required.
	Fan unbalanced/ catching on housing	Manually re-center fan on each side. Check fan is not warped or damaged.	
Heater only blowing cold air	Fan clogged	Remove the heating unit and remove dust from fan.	If all solutions have been tested and problem persists, a new heating element/ fan assembly is required.
	Faulty heating element	Inspect the heating element and make sure all wires are firmly connected.	
	Faulty fan motor	Fan may be rotating to slow.	
No flame picture/ partial flame picture	Loose connection	Ensure all wires are connected firmly.	If all solutions have been tested and problem persists, a new PCB is most likely required.
	LED blown (If partial flame picture)	Test the faulty LED strip using another LED power connector that you know works. If LED strip still doesn't work, the fault is most likely with the LED strip and not the PCB. New LED strip required.	
	Damaged PCB	New PCB required.	

Heater cutting out	Build-up of hot air	Ensure inlets and outlet are free from obstruction and there are sufficient clearances surrounding the unit.	If problem persists, the installation will need assessed to ensure it adheres to all required minimum clearances as stated in this manual.
	Thermostat setting causing heater to cut-out	Adjust thermostat setting on remote to maintain desired room temp or deactivate thermostat setting.	-
Heater switching on without activation	Thermostat set to keep room at certain temperature.	Adjust thermostat setting to maintain desired room temp or deactivate thermostat setting.	If all solutions have been tested and problem persists, a new PCB is required.
	Thermostat faulty	Replace PCB	

NOTE: Wiring and exploded diagrams to assist with fire repair are available on request.



WEEE：

Meaning of crossed-out wheeled dustbin:
Do not dispose of electrical appliances as unsorted municipal waste, use separate collection facilities. Contact your local government for information regarding the collection systems available. If electrical appliances are disposed of in landfills or dumps, hazardous substances can leak into the groundwater and get into the food chain, damaging your health and well-being.
When replacing old appliances with new ones, **the retailer is legally obligated to take back your old appliance for disposal, free of charge.**

Manufacturer's name:
Micon Distribution Ltd.
Manufacurer's address:
1a Hallstown Road, Ballinderry Upper,
Lisburn, BT28 2NE

Product Warranty

Your product is guaranteed for one year from the date of purchase.

Should this product prove defective within one year of purchase due to a design fault, workmanship or material breakdown, the product will be repaired or replaced free of charge.

Product warranty is subject to the following conditions:

- The product is to be used for domestic purposes only in accordance with the operating instructions.
- Responsibility of proof of purchase lies with the end user(s), who must prove product purchase within 12 month period of claim date.
- All warranties, will be invalidated if unauthorised repairs or modifications are made to the electric fire, or in case of accident,misuse or damage caused by improper installation, or to damage occurring during transit to or from the repairer and alteredor missing serial numbers.
- This Warranty does not apply to Heating elements, Bulbs or fuses within the product.

Your rights under this guarantee are additional to your statutory rights, which in turn are not affected by this guarantee

Should you require after sales information or warranty assistance within UK & Ireland with this product please go to https://www.micon-dist.com/.

Imported and Distributed by Micon Distribution Ltd.1a Hallstown Road, Ballinderry Upper, Lisburn BT28 2NE. Ezee Glow Brand exclusively owned by Micon


EZEEGLOW™