MAZONA STOVES



Scan QR code for up-to-date manual version

Portland/ Dedham Inset Stove Range – Eco-design Compliant

Operation and Installation Manual

Portland/ Dedham 5kw – MZEDPLMB; Portland/ Dedham 7kw - MZEDPLMB7

Revision 3 – 19/12/2023

PLEASE RETAIN FOR FUTURE REFERENCE

CE

UK CA

The Clean Air Act 1993 and Smoke Control Areas

Under the Clean Air Act local authorities may declare the whole or part of the district of the authority to be a smoke control area. It is an offence to emit smoke from a chimney of a building, from a furnace or from any fixed boiler if located in a designated smoke control area. It is also an offence to acquire an "unauthorised fuel" for use within a smoke control area unless it is used in an "exempt" appliance ("exempted" from the controls which generally apply in the smoke control area).

In England appliances are exempted by publication on a list by the Secretary of State in accordance with changes made to sections 20 and 21 of the Clean Air Act 1993 by section 15 of the Deregulation Act 2015. In Scotland appliances are exempted by publication on a list by Scottish Ministers under section 50 of the Regulatory Reform (Scotland) Act 2014. Similarly, In Northern Ireland appliances are exempted by publication on a list by the Department of Agriculture, Environment and Rural Affairs under Section 16 of the Environmental Better regulation Act (Northern Ireland) 2016. In Wales appliances are exempted by regulations made by Welsh Ministers.

Further information on the requirements of the Clean Air Act can be found here: https://www.gov.uk/smoke-control-area-rules

Your local authority is responsible for implementing the Clean Air Act 1993 including designation and supervision of smoke control areas and you can contact them for details of Clean Air Act requirements.

The Mazona Portland/ Dedham 5kw Eco and Mazona Portland/ Dedham 7kw Eco must be fitted with a mechanical stop to prevent closure of the secondary air controls beyond 10mm open and 5mm open retrospectively.

The Mazona Portland/ Dedham 5kw Inset stove and Mazona Portland/ Dedham 7kw Eco have been recommended as suitable for use in smoke control areas.

Welcome to Mazona

Congratulations on purchasing your very own Mazona stove.

We're sure you can't wait to get started, but please, read this manual thoroughly. You'll learn the ins and outs of using your stove and we promise you, you'll hit the ground running.

We'd like to thank you for supporting Mazona, a brand which strives to produce reliable, eco-friendly stoves at an affordable price.



IMPORTANT

It is important that this manual is read by the installer before installation. The householder should familiarise themselves with the manual before using the appliance. Incorrect installation of this stove can be dangerous. The installation should be carried out by a trained competent person and in accordance with local and national building regulations.

For practical guidance in respect to the installation of your stove, required ventilation, hearth construction, flue construction and compliance with building regulations please refer to:

Oftec Information on Relevant Building Regulations:

https://www.oftec.org/consumers/why-choose-an-oftec-registered-competent-person/building-regulations-and-heating-installation-work

Hetas Information on Relevant Building Regulations. Links to your specific local building regulations are also accessible through here:
https://www.hetas.co.uk/consumer/regulations/

Approved Document J of the Building regulations 2010 (England and Wales)
http://www.planningportal.gov.uk/buildingregulations/approveddocuments/partj/approved

The Communities and Local Government website: www.communities.gov.uk

The Planning Portal website (England and Wales): www.planningportal.co.uk

If you are the person undertaking the building work, you can seek assistance from the relevant local authority building control service or from your approved inspector.

Please note that, depending on which part of the UK or Ireland the stove is being fitted, you may be responsible for ensuring that the work carried out complies with building regulations. The building owner may also have a responsibility for ensuring compliance of building regulation requirements.

1) INSTALLATION INSTRUCTIONS

APPLIANCE LOCATION

The appliance must be located at specific distances from its surroundings. This is to prevent damage to products & furnishings within the vicinity of the appliance. Adequate space should be provided for servicing the appliance.

Adjacent walls and cavities should be made of non-combustible materials.

Distance to combustibles	Front	Side	Back	Hearth Temp.
Mazona Portland/ Dedham 5kw	100cm	30cm	40cm	>100°C
Mazona Portland/ Dedham 7kw	130cm	30cm	30cm	>100°C

VENTILATION

Your stove requires ventilation to supply it with air for combustion. Ventilation is also required to ensure the proper operation of flues and chimneys to ensure that the products of combustion are safely dispersed to the outside air. Please ensure the stove has sufficient ventilation for operation.

Extraction fans lower the pressure in a building which can cause spillage of combustion products from an open-flued appliance. This can occur even if the appliance and the fan are in different rooms. If mechanical extraction is

unavoidable in the same room as your stove, then seek specialist advice to ensure safe operation of the appliance.

A competent installer should be aware of specific ventilation parameters. Building control guidance for heat producing appliance ventilation can be found at: https://www.hetas.co.uk/19223/.

For local building regulations, please see page 4.

FLUE / CHIMNEY

It is important that the flue or chimney to which this appliance is to be connected has been checked by a competent person to ensure its suitability and that it will work safely. The chimney or flue and installation should comply with local and national building regulations.

Sufficient operating draft is required for the product to function optimally. The following considerations should be considered to ensure safe operation of the appliance.

The flue must be:

- Suitable for use with solid fuel burning appliances (Min. rating of T400).
- In good condition and provide a draft of 10-20 Pa.
- Free from any internal obstructions.
- At least 4.5 metres from the top of the stove outlet to the top of the chimney.
- Independent from a shared flue system of any type.
- Larger or equal in diameter than the appliance flue collar size.

Provision should be made to ensure the chimney can be swept in the entirety of its length. For local building regulations, please see page 4.

If using single wall flue, please ensure there is a clearance of at least 3 times the diameter of the flue pipe from any combustible material (e.g. 150mm pipe = 450mm minimum clearance to wooden beam).

HEARTH CONSTRUCTION

Hearths should be constructed of suitably robust materials and to appropriate dimensions such that, in normal use, they prevent combustion appliances setting fire to the building fabric and furnishings and they limit the risk of people being accidently burnt.

The hearth should be able to support the weight of the stove and its chimney if the chimney is not independently supported.

For local building regulations, please see page 4.

FUEL OVERLOADING

The maximum amount of fuel specified in this manual should not be exceeded, overloading can cause excess smoke.

2) FITTING INSTRUCTIONS

Note - Stove shape/geometry may not exactly match the illustrations below, fitting steps are the same.

1. Remove stove from packaging.

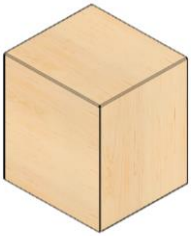



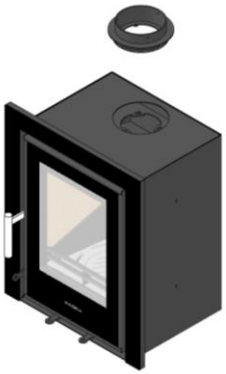

2. Remove flue collar from stove.

3. Attach flue collar to flue and push upwards in situ, leaving enough room for stove to slide in place.



4. Slide stove into the cavity/recess, ensuring the back of the trim is flush with the front of the recess. Mount it to the floor/ cross-brace using the slot holes provided (Inset fitting shown).

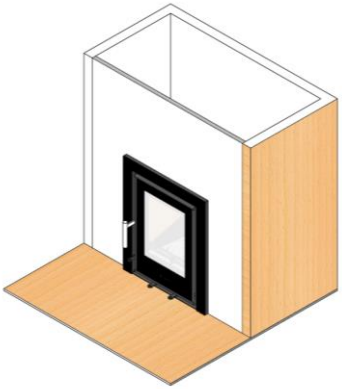

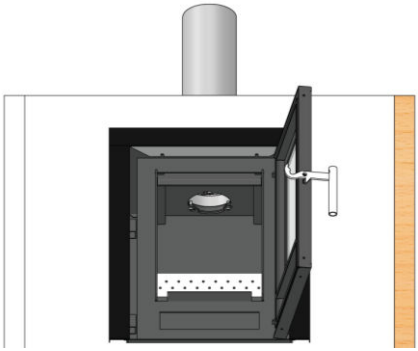

5. Open the stove door, remove side bricks & baffles, and pull the flue collar/ flue down on top of the stove. Secure in place using the screws provided.

6. Re-assemble stove internal parts.

3) OPERATION INSTRUCTIONS

Lighting the stove

1. Open the door and ensure the secondary/air wash control lever is opened fully.

2. On first lighting, we recommend using 2 - 3 firelighters along with wood kindling built in a pyramid above the firelighters to obtain a good fire bed. Ignite the firelighters then close the stove door and allow the firelighters and wood kindling to ignite to the point where the embers are glowing.

3. Add your fuel of choice and periodically adjust each air control. Burn small loads initially before full fires are used, to allow paint & fitting cement to cure.

Controlling Stove

Burning wood:

- Air-wash/secondary air lever (The control to the right) - Use this to control the fire when burning wood.

- Primary air control lever (The control to the left) – This should be closed (moved to the left) as wood does not need air from below to burn effectively.

- Avoid overloading your appliance as this may cause damage to the product and cause unstable burn conditions. See max fuel load stated in 'Refuelling Wood' section for more info.

Burning coal:

- The Air-wash/secondary air lever (The control to the right) – This should be left partially open, to allow the air-wash system to keep the glass clean.

- Primary air control lever (The control to the left) - When burning coal, the stove should be mainly controlled using this lever.

- Avoid prolonged periods of slow burning which may cause build-up of creosote with certain fuels. Using a flue temperature gauge can help achieve the optimum temperature for clean combustion. Ensure you use the suitable fuel for the appliance.

Recommended Fuels

- Split and dried logs properly seasoned with less than 20% moisture content (max fuel load on page 10 should not be exceeded).
- Anthracite (Medium) smokeless fuel.
- Eco Logs.
- Briquettes

Note that only Authorised fuels can be used in a Smoke Control Area, details of Authorised fuels can be found at https://smokecontrol.defra.gov.uk/fuels.php

Fuel to Avoid

Use of incorrect fuels can **invalidate the warranty of your appliance**.

- Petroleum Coke
- Household waste
- Wood with a moisture content above 20%
- Household coal or bituminous coal

- Waste timber that has been painted or treated e.g. railway sleepers

Refuelling Wood

1. Refuel when a layer of hot embers has been formed in the fire bed.
2. Spread the embers out over the fire bed using the ash-pan tool.
3. While the embers are still glowing, add 1 or 2 logs to the fire.
4. Open the right air control fully to ignite the new fuel.
5. Once new logs have ignited, adjust the right air control to give the desired combustion. If there are too few embers, use suitable kindling prior to the fuel load to prevent excessive smoke.

Fuel constraints	Portland/ Dedham 5kw	Portland/ Dedham 7kw
Max fuel load	1.0kg	1.9kg
Max log length	280mm	280mm

Refuelling Coal

1. De-ash the fire bed.
2. Fully open the left air control and add fuel.
3. When the new fuel is fully lit adjust the left air control to give the desired combustion.

Refuelling on a low fire bed

If there is insufficient burning material in the fire bed to light a new fuel charge, excessive smoke emission can occur. Refuelling must be carried out onto a sufficient quantity of glowing embers and ash that the new fuel charge will ignite in a reasonable period. If there are too few embers in the fire bed, add suitable kindling to prevent excessive smoke.

Weather Conditions

Weather conditions can affect the performance of the stove. Strong winds combined with close buildings or trees can cause the stove to smoke. Heavy rain may lower the temperature of the flue making it difficult to light or slow to heat up.

Operation with door left open

Operation with the door open can cause excess smoke. The appliance must not be operated with the appliance door left open except as directed in the instructions.

Dampers/ controls left open

Operation with the air controls or appliance dampers open can cause excess smoke. The appliance must not be operated with air controls, appliance dampers or door left open except as directed in the instructions.

4) Troubleshooting/ F.A.Q.

Problem	Probable Cause	Recommended Action
Fire difficult to light	Green/Wet wood	Use recommended fuels
	Insufficient air	Open air controls
	Insufficient draft	Check flue is not obstructed, sweep if needed
	Fuel too large	Use kindling / small logs to start fire
Fire burns too quickly	Too much air	Reduce air controls
	Excessive draft	Install draft stabiliser/damper
	Insufficient Seal	Check condition of rope seal around glass
Smokes upon initial lighting	Cold flue pipe	Burn firelighters/small fuel loads to preheat flue prior to lighting
Smokes while burning	Insufficient draft	Check flue is not obstructed
Glass blackening	Insufficient Air	Open air-wash control
	Damp fuel	Use recommended fuels
	Insufficient seal	Check condition of rope seal around glass
Glass crazing (minute splinter marks on glass)	Cold liquid hitting warm glass	Replace glass

Low heat output	Poor quality fuel	Use recommended fuels
	Insufficient Seal	Check condition of rope seal around glass

IMPORTANT NOTICE

WARNING: When properly installed and operated this appliance should only emit fumes during fuelling and de-ashing. The stove is designed to be operated only with the doors shut. To prevent fume spillage only open the doors for ignition, refuelling and cleaning. Persistent fume emission is dangerous and in certain circumstances could be fatal. It should not be tolerated. If you experience heavy or persistent fume emission, please follow the procedure below.

1. Open all windows or doors to ventilate the area.
2. Extinguish the fire and if safe to do so, remove fuel from the appliance.
3. Check for blockages in the appliance and clear if possible. Particular attention should be paid to the baffle plate which should be inspected for any accumulated soot and products of combustion regularly. If excessive amounts are present, the baffle plate needs removed and cleaned.
4. Have the chimney checked by a professional person for any sign of blockage.
5. Do not attempt to relight the appliance until the source of the blockage has been determined and cleared.
6. Seek professional opinion on the cause of the blockage if in any doubt.

You may also detect a smell from the appliance on initial lighting while the paint cures. Stove paint must be cured on the surface of an appliance. During the first few hours of burning, there will be some fumes / smoke as the paint cures. When the body of the appliance is properly heated, it usually takes about an hour or so after that to bake / cure the paint. It is recommended to ventilate the room well by opening windows / doors during this time and where possible, leave the room.

In the event of a chimney fire, immediately close the door and move the air wash to the closed position. Call for assistance from fire service. A chimney fire can cause significant damage to the chimney construction and must be assessed by a professional before relighting your appliance.

Never burn plastics, household waste or liquids in your stove.

5) MAINTENANCE

De-ashing

The appliance should be de-ashed at least once every 24 hours depending on fuel type and heating load. Use the riddling control on the left side below the door handle, to filter the ash through the grate into the ash pan for removal. It is important that the level of ash in the ash pan is not allowed to build up to where it is touching the bottom grate. This will cause the grate to burn out prematurely.

Baffle plate

Particular attention should be paid to the baffle plate, which should be regularly inspected for any accumulated soot and products of combustion. If a medium to excessive amount is present, the baffle plate needs removed and cleaned.

Glass Cleaning

We recommend that the glass should be allowed to cool, then use a damp cloth to clean it. Abrasive cleaners should be avoided, as they tend to scrape the glass making it more and more difficult to keep clean. Use of a stove glass cleaner (available from your retailer) is recommended for stubborn stains.

Door

Check that the seal around the door is airtight. If not, replace the rope seal if necessary.

Paintwork

If paintwork needs repaired, contact your retailer directly. The paint used on your product is specialised high temperature resistant paint and ordinary paint will not suffice. Never perform any paint repair when unit is hot.

Flue / Chimney cleaning

Please ensure that the Flue is swept as instructed. Blockages or build-ups within the flue can cause loss of performance, damage to the product and harm to the surroundings and users as a result. Depending on the fuel source used, it's recommended that the flue is cleaned:

- Anthracite – Clean at least once a year.
- Wood – Clean before and after the heating season. If used excessively, clean during the heating season as well.

6) TECHNICAL INFORMATION

Appliance	Portland/ Dedham 5kw		Portland/ Dedham 7kw	
Fuel type	Beech	Maxibrite	Beech	Maxibrite
Output kW (nominal)	4.6	4.9	6.7	7.2
Efficiency (%)	76.9	76.1	76.5	79.0
CO Emissions at 13% O_2 (vol%)	0.07	0.06	0.05	0.08
NO_x Emissions at 13% O_2 (mg/m_0^3)	106	154	124	112
C_xH_y (OGC) Emissions at 13% O_2 (mg/m_0^3)	66	20	26	6
Dust (PM) Emissions at 13% O_2 (mg/m_0^3)	23	19	25	11
Flue gas temp. (°C)	268	276	276	251

7) DIMENSIONS

	Height(mm)	Width(mm)	Depth(mm)	Weig-ht (Kg)	Collar (mm)	Maxim-um log length (mm)
Portland / Dedham 5kw	598mm	486mm	347mm	90	5”/125mm	250mm x 100mm
Portland / Dedham 7kw	598mm	486mm	415mm	103	5”/125mm	250mm x 100mm

8) PRODUCT DRAWINGS

Portland/ Dedham 5kw:

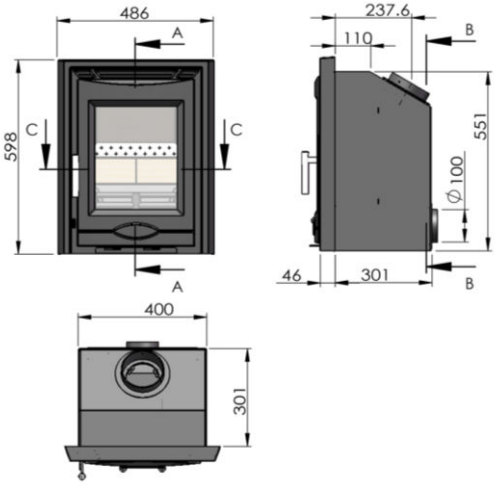

Portland/ Dedham 7kw:

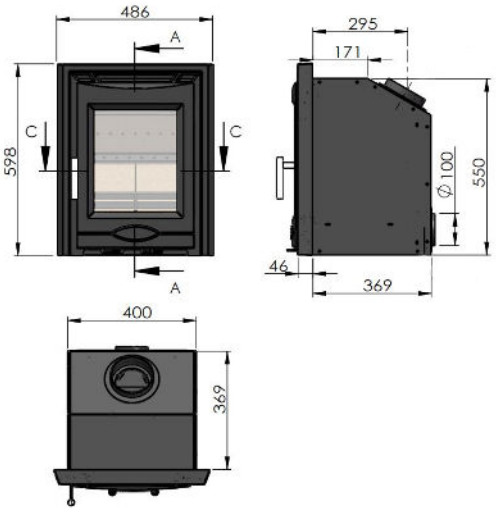

9) EXPLODED DIAGRAM & SPARE PARTS

Portland/ Dedham 5kw parts diagram:

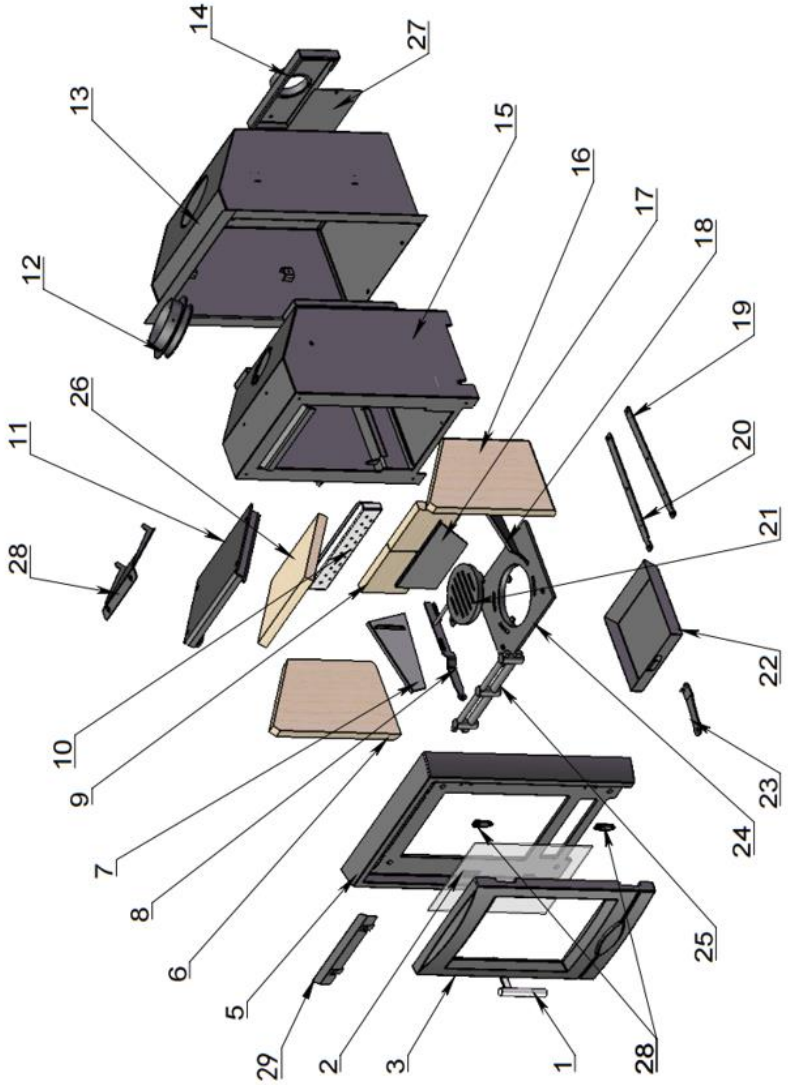

Portland/ Dedham 7kw parts diagram:

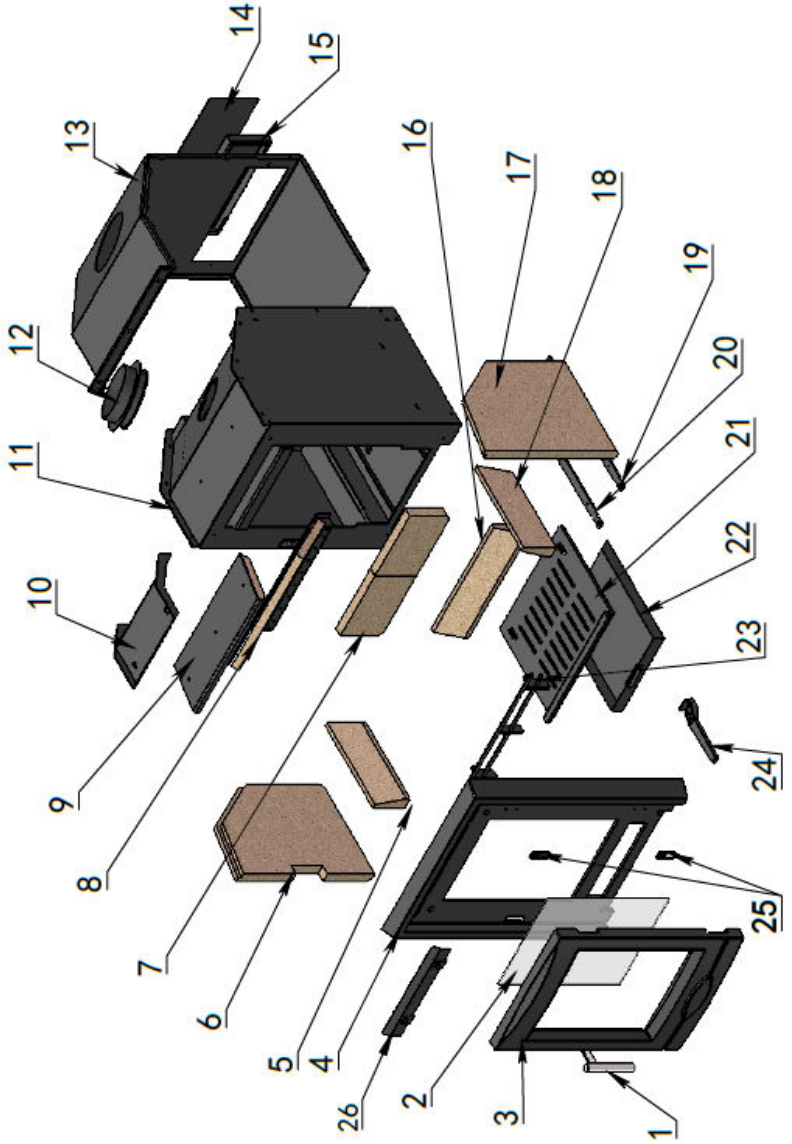

Portland/ Dedham 5kw parts list:

Part No.	Part Name	Quantity
1	Door handle & fixing bolts	1
2	Door glass	1
3	Cast door	1
5	Cast 3-sided trim	1
6	Left brick	1
7, 17 & 18	Coal burning kit	1
8	Riddle controller	1
9	Back brick	2
10	Tertiary air outlet	1
11	Lower baffle	1
12	Flue adapter & fixing bolts	1
13	Outer shell	1
14	Direct air kit & fixing bolts	1
15	Inner stove body	1
16	Right brick	1
19	Secondary & tertiary air controller	1
20	Primary air controller	1
21	Rotating grate & fixing bolts	1
22	Ash-pan	1
23	Ash-pan handle	1
24	Grate support	1
25	Front bars	1
26	Lower baffle brick	1
27	Direct air cover plate	1
28	Upper baffle	1
29	Secondary air blocker plate & fixings	1

Portland/ Dedham 7kw parts list:

Part No.	Part Name	Quantity
1	Door handle & fixing bolts	1
2	Door glass	1
3	Cast door	1
4	Cast 3-sided trim	1
5, 16 & 18	Coal burning kit	1
6	Left brick	1
7	Back brick	2
8	Lower baffle & tertiary air outlet	1
9	Middle baffle	1
10	Upper baffle	1
11	Inner stove body	1
12	Flue adapter & fixing bolts	1
13	Outer shell	1
14	Direct air cover plate	1
15	Direct air kit & fixing bolts	1
17	Right brick	1
19	Secondary & Tertiary air control lever	1
20	Primary air control lever	1
21	Grate support	1
22	Ash-pan	1
23	Front bars	1
24	Ash-pan handle	1
25	Door hinge	1
26	Secondary air blocker plate & fixings	1

WARRANTY

5 Years – Your warranty covers replacement of the stove body if it is found to be defective within 5 years of purchase. Refitting and shipping costs are not covered.

1 Year – Bottom grate, bottom grate support, riddling bar, front bars, ashpan, flue collar and handle.

Not Covered

- Glass, glass clips, rope seals, baffle plate, left/ right/ back/ baffle bricks. Any other parts aren't covered by warranty.
- Defects or faults caused by local conditions such as draught problems and chimney defects.
- Damage caused by over firing.
- Damage resulting from the use of unsuitable fuel.

Unauthorised modifications, misuse, neglect, abuse, excessive wear and tear and the use of non-original replacement parts will invalidate the warranty of the stove.

Should you require any further information, or wish to view our other products available please view at www.mazonastoves.com

All rights reserved. Material contained in this publication may not be reproduced in whole or in part, without prior permission in writing from Micon Distribution Ltd

Imported and Distributed by Micon Distribution Ltd.
1a Hallstown Road, Ballinderry Upper, Lisburn BT28 2NE
Mazona Brand exclusively owned by Micon

WARRANTY CLAIM FORM

PLEASE ENSURE ALL MANDATORY SECTIONS (*) ARE CORRECTLY COMPLETED OR WE WILL NOT BE ABLE TO PROCESS YOUR CLAIM

Customer name*	
Customer Address*	
Post Code*	
Date*	
Contact Number(s)*	
Retailer Name*	
Retailer Contact*	
Date of Purchase	
Type of fuel used*	
Problem reported*	
Comments	
Date of Installation*	
Installers name*	
Installers contact number*	
Building Control Certificate Number	

Customer Signature:* **Date:***