MAZONA STOVES



Scan QR code for latest manual version

Wicklow/Warwick Stove Range Eco-design Compliant

Operation and Installation Manual

Wicklow/Warwick 4kW – MZSWIC4, Wicklow/Warwick 5kW - MZSWIC5, Wicklow/ Warwick 8kW - MZSWIC8, Wicklow/ Warwick 5kW Widescreen - MZSWIC5WS, Wicklow/Warwick 10kW – MZSWIC10

Version 8 – 23/04/2025

CE

PLEASE RETAIN FOR FUTURE REFERENCE

UK CA

The Clean Air Act 1993 and Smoke Control Areas

Under the Clean Air Act local authorities may declare the whole or part of the district of the authority to be a smoke control area. It is an offence to emit smoke from a chimney of a building, from a furnace or from any fixed boiler if located in a designated smoke control area. It is also an offence to acquire an "unauthorised fuel" for use within a smoke control area unless it is used in an "exempt" appliance ("exempted" from the controls which generally apply in the smoke control area).

In England appliances are exempted by publication on a list by the Secretary of State in accordance with changes made to sections 20 and 21 of the Clean Air Act 1993 by section 15 of the Deregulation Act 2015. In Scotland appliances are exempted by publication on a list by Scottish Ministers under section 50 of the Regulatory Reform (Scotland) Act 2014. Similarly, In Northern Ireland appliances are exempted by publication on a list by the Department of Agriculture, Environment and Rural Affairs under Section 16 of the Environmental Better regulation Act (Northern Ireland) 2016. In Wales appliances are exempted by regulations made by Welsh Ministers.

Further information on the requirements of the Clean Air Act can be found here: https://www.gov.uk/smoke-control-area-rules

Your local authority is responsible for implementing the Clean Air Act 1993 including designation and supervision of smoke control areas and you can contact them for details of Clean Air Act requirements.

The Mazona Wicklow/ Warwick 4kW, 5kW, 8kW, 10kW and 5kW Widescreen and must be fitted with a mechanical stop to prevent closure of the secondary air controls beyond 7mm open, 7mm open, 11mm open, 4.8mm open and 13mm retrospectively, and tertiary air controls beyond 3mm open, 14.7mm open, 12.5mm open and 3mm retrospectively.

The Mazona Wicklow/Warwick 4kW, 5kW, 8kW, 10kW and 5kW Widescreen and stoves have been recommended as suitable for use in smoke control areas when burning wood logs.

Welcome to Mazona

Congratulations on purchasing your very own Mazona stove.

We're sure you can't wait to get started, but please, read this manual thoroughly. You'll learn the ins and outs of using your stove and we promise you, you'll hit the ground running.

We'd like to thank you for supporting Mazona, a brand which strives to produce reliable, eco-friendly stoves at an affordable price.



IMPORTANT

It is important that this manual is read by the installer before installation. The householder should familiarise themselves with the manual before using the appliance. Incorrect installation of this stove can be dangerous. The installation should be carried out by a trained competent person and in accordance with local and national building regulations.

For practical guidance in respect to the installation of your stove, required ventilation, hearth construction, flue construction and compliance with building regulations please refer to:

Oftec Information on Relevant Building Regulations:

https://www.oftec.org/consumers/why-choose-an-oftec-registered-competent-person/building-regulations-and-heating-installation-work

Hetas Information on Relevant Building Regulations. Links to your specific local building regulations are also accessible through here.
https://www.hetas.co.uk/consumer/regulations/

Approved Document J of the Building regulations 2010 (England and Wales)
http://www.planningportal.gov.uk/buildingregulations/approveddocuments/partj/approved

The Communities and Local Government website: www.communities.gov.uk

The Planning Portal website (England and Wales): www.planningportal.co.uk

If you are the person undertaking the building work, you can seek assistance from the relevant local authority building control service or from your approved inspector.

Please note that, depending on which part of the UK or Ireland the stove is being fitted, you may be responsible for ensuring that the work carried out complies with building regulations. The building owner may also have a responsibility for ensuring compliance of building regulation requirements.

1) INSTALLATION INSTRUCTIONS

APPLIANCE LOCATION

The appliance must be located at specific distances from its surroundings. This is to prevent damage to products & furnishings within the vicinity of the appliance. Adequate space should be provided for servicing the appliance.

We recommend furnishings be kept 1m away at all times, to avoid heat degradation over time. We also recommend a minimum clearance of 150mm each side & back of the appliance, with 300mm clearance above and in front of the appliance, to provide sufficient space for heat to dissipate to room space. See below for suggested distance to combustible materials.

Distance to combustibles.	**Front**	**Side**	**Back**	**Hearth Temp.**
MZSWIC4	100cm	40cm	40cm	> 100°C
MZSWIC5	100cm	55cm	40cm	> 100°C
MZSWIC8	100cm	55cm	60cm	> 100°C
MZSWIC10	140cm	70cm	47cm	>100°C
MZSWIC5WS	100cm	55cm	45cm	> 100°C

VENTILATION

Your stove requires ventilation to supply it with air for combustion. Ventilation is also required to ensure the proper operation of flues and

chimneys to ensure that the products of combustion are safely dispersed to the outside air. Please ensure the stove has sufficient ventilation for operation.

Extraction fans lower the pressure in a building which can cause spillage of combustion products from an open-flued appliance. This can occur even if the appliance and the fan are in different rooms. If mechanical extraction is unavoidable in the same room as your stove, then seek specialist advice to ensure safe operation of the appliance.

A competent installer should be aware of specific ventilation parameters. Building control guidance for heat producing appliance ventilation can be found at: https://www.hetas.co.uk/19223/ .

For local building regulations, please see page 4.

FLUE / CHIMNEY

It is important that the flue or chimney to which this appliance is to be connected has been checked by a competent person to ensure its suitability and that it will work safely. The chimney or flue and installation should comply with local and national building regulations.

Sufficient operating draft is required for the product to function optimally. The following considerations should be considered to ensure safe operation of the appliance.

The flue must be:

- Suitable for use with solid fuel burning appliances (Min. rating of T400).
- In good condition and provide a draft of 10-20 Pa.
- Free from any internal obstructions.

- At least 4.5 metres from the top of the stove outlet to the top of the chimney.
- Independent from a shared flue system of any type.
- Larger or equal in diameter than the appliance flue collar size.

Provision should be made to ensure the chimney can be swept in the entirety of its length. For local building regulations, please see page 4.

If using single wall flue, please ensure there is a clearance of at least 3 times the diameter of the flue pipe from any combustible material (e.g. 150mm pipe = 450mm minimum clearance to wooden beam).

HEARTH CONSTRUCTION

Hearths should be constructed of suitably robust materials and to appropriate dimensions such that, in normal use, they prevent combustion appliances setting fire to the building fabric and furnishings and they limit the risk of people being accidently burnt.

The hearth should be able to support the weight of the stove and its chimney if the chimney is not independently supported.

For local building regulations, please see page 4.

FUEL OVERLOADING

The maximum amount of fuel specified in this manual should not be exceeded, overloading can cause excess smoke.

2) OPERATION INSTRUCTIONS

Lighting the stove

1. Open the door and ensure the secondary control lever is opened fully. It's the control on the right.

2. On first lighting, we recommend using 2 - 3 firelighters along with wood kindling built in a pyramid above the firelighters to obtain a good fire bed. Ignite the firelighters then close the stove door and allow the firelighters and wood kindling to ignite to the point where the embers are glowing.

3. Add your fuel of choice and control the stove as advised. Burn small loads initially in your new appliance before full fires are used, to allow paint & fitting cement to cure.

Controlling Stove

Burning wood:

- Air-wash/secondary air lever (The control to the right) - Use this to control the fire when burning wood.

- Primary air control lever (The control to the left) – This should be closed as wood does not need air from below to burn effectively.

- Avoid overloading your appliance as this may cause damage to the product and cause unstable burn conditions. See max fuel load stated in 'Refuelling Wood' section for more info.

Burning coal:

- The Air-wash/secondary air lever (The control to the right) – This should be left partially open, to allow the air-wash system to keep the glass clean.

- Primary air control lever (The control to the left) - When burning coal, the stove should be mainly controlled using this lever.

- Avoid prolonged periods of slow burning which may cause build-up of creosote with certain fuels. Using a flue temperature gauge can help achieve the optimum temperature for clean combustion. See bottom of page 17 for optimum flue temperature for the relevant fuels.

Recommended Fuels

- Split and dried logs properly seasoned with less than 20% moisture content (max fuel load on page 10 should not be exceeded).
- Anthracite (Medium) smokeless fuel.
- Eco Logs.
- Briquettes.

Note that only Authorised fuels can be used in a Smoke Control Area, details of Authorised fuels can be found at https://smokecontrol.defra.gov.uk/fuels.php

Fuel to Avoid

Use of incorrect fuels can **invalidate the warranty of your appliance**:

- Petroleum Coke.
- Household waste.
- Wood with a moisture content above 20%.

- Household coal or bituminous coal.
- Waste timber that has been painted or treated e.g., outdoor fencing.

Refuelling Wood

1. Refuel when a layer of hot embers has been formed in the fire bed.
2. Spread the embers over the fire bed with a poker.
3. While the embers are still glowing, add 1 or 2 logs to the fire.
4. Open the right air control fully to ignite the new fuel.
5. Once the new logs have ignited, adjust the right air control to give the desired combustion. If there are too few embers, use suitable kindling prior to the fuel load to prevent excessive smoke.

Refuelling Coal

1. De-ash the fire bed using the riddle control on the left of the stove.
2. Fully open the left/ primary air control.
3. Open door, add coal, close door.
4. Adjust the primary air control to give the desired combustion.

Refuelling on a low fire bed

If there is insufficient burning material in the fire bed to light the new fuel, excessive smoke emission can occur. Refuelling must be carried out onto a sufficient quantity of glowing embers, so the new fuel will ignite in a reasonable period. If there are too few embers in the fire bed, add suitable kindling to prevent excessive smoke.

Fuel constraints	MZSWIC4	MZSWIC5	MZSWIC8	MZSWIC10	MZSWIC5 WS
Max fuel load	1.0kg	1.1kg	1.8kg	2.3kg	1.1kg
Max log length	280mm	280mm	350mm	480mm	350mm

Weather Conditions

Weather conditions can affect the performance of the stove. Strong winds combined with close buildings or trees can cause the stove to smoke. Heavy rain may lower the temperature of the flue making it difficult to light or slow to heat up.

Operation with door left open

Operation with the door open can cause excess smoke. The appliance must not be operated with the appliance door left open, except as directed in the instructions.

Air controls left open

Operation with the air controls open can cause excess smoke. The appliance must not be operated with air controls, appliance dampers or door left open, except as directed in the instructions.

3) Troubleshooting/ F.A.Q.

Problem	Probable Cause	Recommended Action
Fire difficult to light	Green/Wet wood	Use recommended fuels
	Insufficient air	Open air controls
	Insufficient draft	Check flue is not obstructed, sweep if needed
	Fuel too large	Use kindling / small logs to start fire
Fire burns too quickly	Too much air	Reduce air controls
	Excessive draft	Install draft stabiliser/damper
	Insufficient Seal	Check condition of rope seal around glass
Smokes upon initial lighting	Cold flue pipe	Burn firelighters/small fuel loads to preheat flue prior to using larger fuel
Smokes while burning	Insufficient draft	Check flue is not obstructed
Glass blackening	Insufficient Air	Open air-wash control
	Damp fuel	Use recommended fuels
	Insufficient seal	Check condition of rope seal around glass
Glass crazing (minute splinter marks on glass)	Cold liquid hitting warm glass	Replace glass

Low heat output	Poor quality fuel	Use recommended fuels
	Insufficient Seal	Check condition of rope seal around glass

IMPORTANT NOTICE

WARNING: When properly installed and operated this appliance should only emit fumes during fuelling and de-ashing. The stove is designed to be operated only with the doors shut. To prevent fume spillage only open the doors for ignition, refuelling and cleaning. Persistent fume emission is dangerous and in certain circumstances could be fatal. It should not be tolerated. If you experience heavy or persistent fume emission, follow the procedure below:

1. Open all windows or doors to ventilate the area.
2. Extinguish the fire and if safe to do so, remove fuel from the appliance.
3. Check for blockages in the appliance and clear if possible. Particular attention should be paid to the baffle plate which should be inspected for any accumulated soot and products of combustion regularly. If excessive amounts are present, the baffle plate needs removed and cleaned.
4. Have the chimney checked by a professional person for any sign of blockage.
5. Do not attempt to relight the appliance until the source of the blockage has been determined and cleared.
6. Seek professional opinion on the cause of the blockage if in any doubt.

You may also detect a smell from the appliance on initial lighting while the paint cures. Stove paint must be cured on the surface of an appliance. During the first few hours of burning, there will be some fumes / smoke as the paint cures. When the body of the appliance is properly heated, it usually takes about an hour or so after that to bake / cure the paint. It is recommended to ventilate the room well by opening windows / doors during this time and where possible, leave the room.

In the event of a chimney fire, immediately close the door and move the air wash to the closed position. Call for assistance from fire service. A chimney fire can cause significant damage to the chimney construction and must be assessed by a professional before relighting your appliance.

Never burn plastics, household waste or liquids in your stove.

4) MAINTENANCE

De-ashing

The appliance should be de-ashed at least once every 24 hours depending on fuel type and heating load. With the door closed, use the riddling knob on the left side to filter the ash through the grate and into the ash pan below for removal. It is important that the level of ash in the ash pan is not allowed to build up to where it is touching the bottom grate. This will cause the grate to burn out prematurely.

Baffle plate

Particular attention should be paid to the baffle plates, which should be regularly inspected for any accumulated soot and products of combustion. If a medium to excessive amount is present, the lower vermiculite baffle needs removed and cleaned, exposing the upper baffle plate. This too needs removed and cleaned.

Glass Cleaning

We recommend that the glass should be allowed to cool, then use a damp cloth to clean it. Abrasive cleaners should be avoided, as they tend to scrape the glass making it more and more difficult to keep clean. Use of a stove glass cleaner (available from your retailer) is recommended for stubborn stains.

Door

Check that the seal around the door is airtight. Replace rope seal if necessary.

Paintwork

If paintwork needs repaired, contact your retailer directly. The paint used on your product is specialised high temperature resistant paint and ordinary paint will not suffice. Never perform any paint repair when unit is hot.

Flue / Chimney cleaning

Please ensure the flue is swept as instructed. Blockages or build-ups within the flue can cause loss of performance, damage to the product and harm to the surroundings and users. Depending on the fuel source, it's recommended that the stove is cleaned:

- Maxibrite – Clean at least once a year.
- Wood – Clean before and after the heating season. If used excessively, clean during the heating season as well.

5) TECHNICAL INFORMATION

Appliance	MZSWIC4		MZSWIC5		MZSWIC8		MZSWIC10		MZSWIC5WS	
Fuel Type	Beech	Maxibrite	Beech	Maxibrite	Beech	Maxibrite	Beech	Maxibrite	Beech	Maxibrite
Output kW (nominal)	4.1	4.2	5.0	5.0	8.1	8.0	9.8	8.8	5.1	5.0
Efficiency (%)	77.1	79.8	83.0	77.4	79.4	75.9	77.9	82.2	78.2	79.0
CO Emissions at 13% O_2 (vol%)	0.12	0.09	0.09	0.09	0.10	0.09	0.07	0.06	0.10	0.09
NO_x Emissions at 13% O_2 (mg/m_0^3)	84	103	89	124	101	108	66	162	101	165
C_xH_y (OGC) Emissions at 13% O_2 (mg/m_0^3)	95	69	71	34	50	29	81	61	91	12
Dust (PM) Emissions at 13% O_2 (mg/m_0^3)	32	25	12	18	25	13	37	36	19	37
Flue gas temp. (°C)	280	288	290	289	324	325	321	293	255	274

6) DIMENSIONS

Appliance	Height (mm)	Width (mm)	Depth (mm)	Weight (kg)	Collar (mm)	Maximum log length (mm)
MZSWIC4	538	370	272	50	5”/125mm	280
MZSWIC5	538	370	312	55	5”/125mm	280
MZSWIC8	581	490	327	71	5”/125mm	350
MZSWIC10	646	570	388	110	6”/150mm	480
MZSWIC5WS	593	490	277	70	5”/125mm	350

7) PRODUCT DRAWINGS

Wicklow/Warwick 4kw:

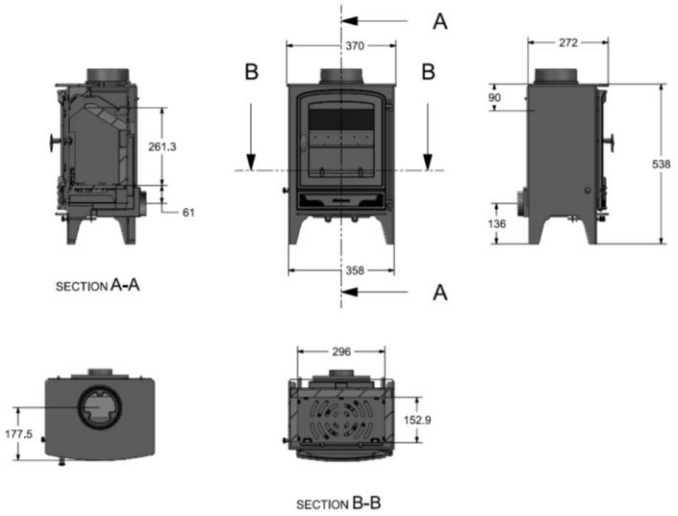

Wicklow/Warwick 5kw:

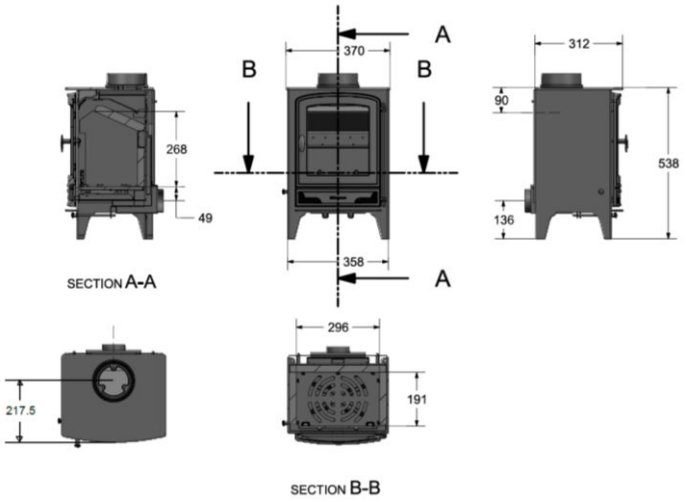

Wicklow/Warwick 8kw:

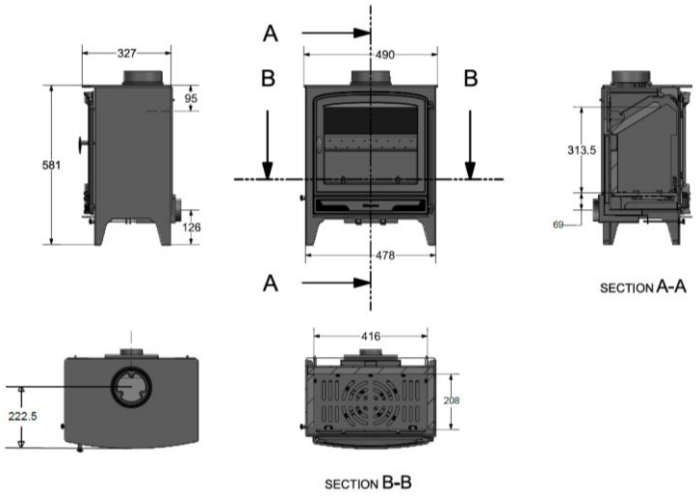

Wicklow/Warwick 5kw Widescreen:

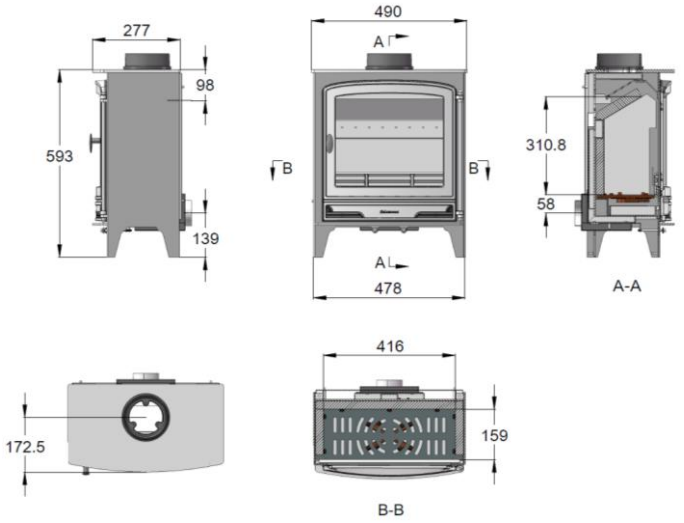

Wicklow/Warwick 10kw:

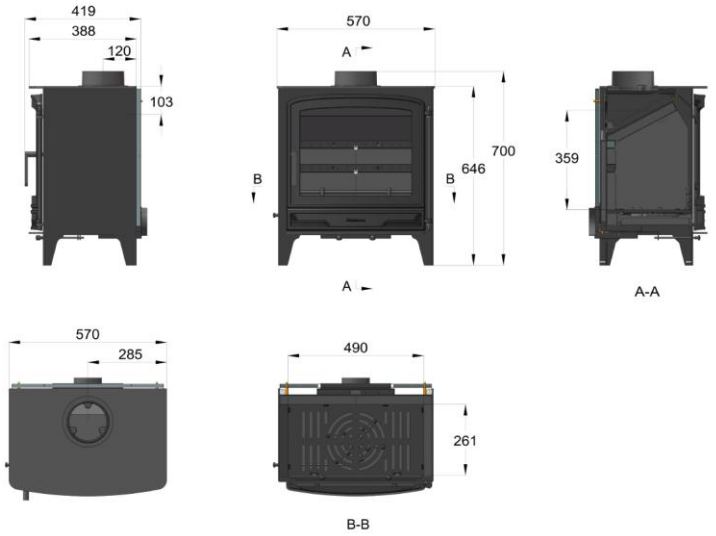

8) EXPLODED DIAGRAM & SPARE PARTS

Wicklow/Warwick 4kw, 5kw, 8kw, 10kw parts diagram:

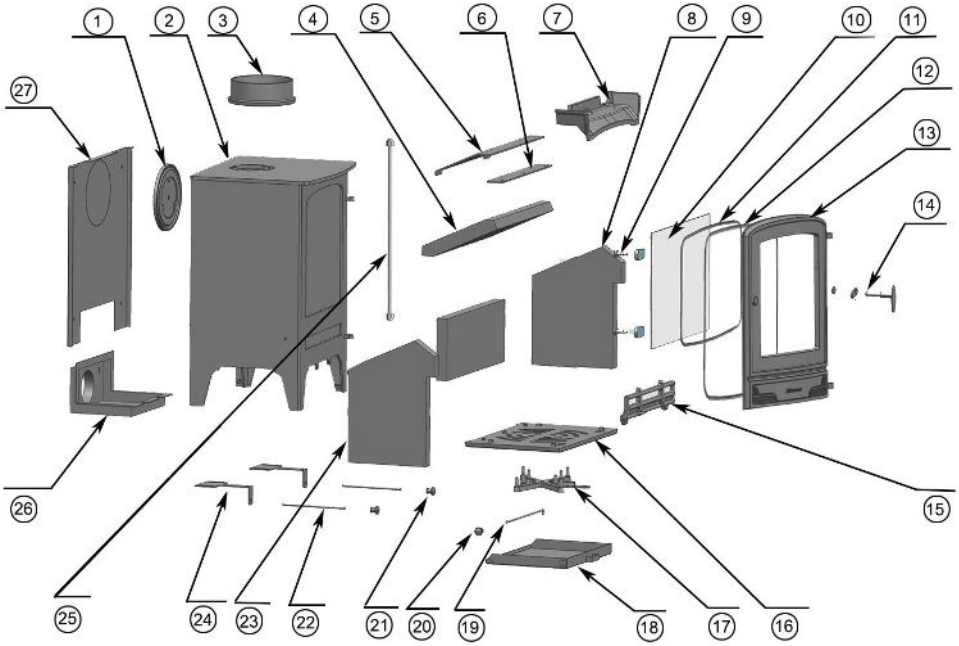

Wicklow/Warwick 4kw, 5kw, 8kw, 10kw parts list:

Product Part	Part number	Quantity
Flue cover	1	1
Steel body	2	1
Flue collar	3	1
Verm. lower baffle	4	1
Steel upper baffle	5	1
Upper baffle bracket	6	1
Cast iron air-wash	7	1
Right verm. side brick	8	1
Glass clips and screws	9	4
Glass	10	1
6mm glass rope	11	1
10mm door rope	12	1
Cast iron door	13	1
Brass handle assembly	14	1
Fire bar	15	1
Grate	16	1
Riddle grate	17	2
Ashpan	18	1
Riddle bar	19	1
Riddle bar knob	20	1
Air control knob	21	2
Air control bar	22	2
Left verm. side brick	23	1
Air slider plate	24	2
Brass hinge assembly	25	1
Direct air kit	26	1
Back heat shield	27	1

Wicklow/Warwick 5kW Widescreen parts diagram:

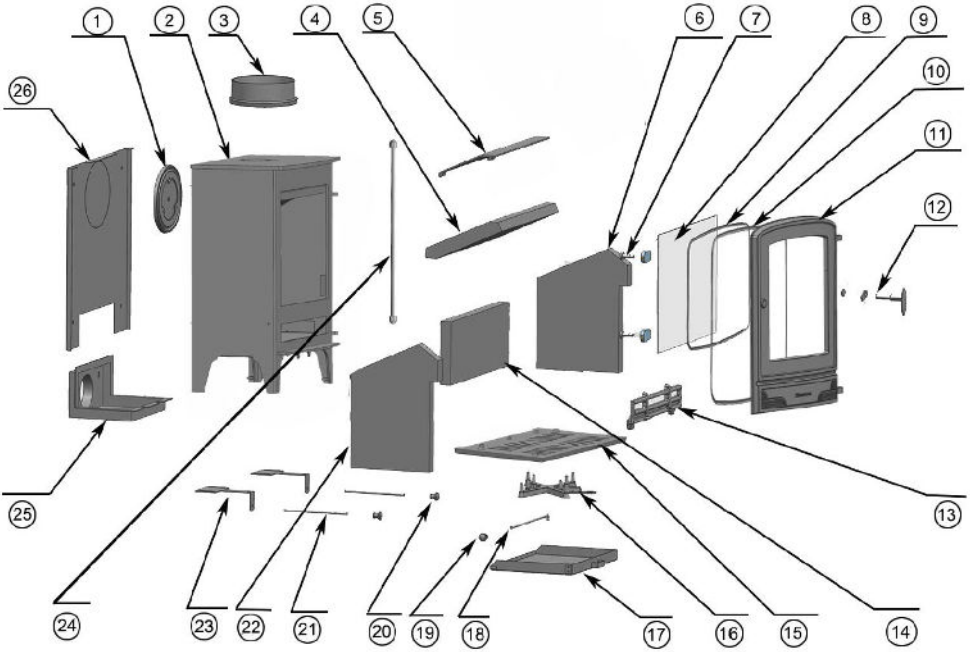

Wicklow/Warwick 5kw Widescreen parts list:

Product Part	Part number	Quantity
Flue cover	1	1
Steel body	2	1
Flue collar	3	1
Verm. lower baffle	4	1
Steel upper baffle	5	1
Right verm. side brick	6	1
Glass clips and screws	7	4
Glass	8	1
6mm glass rope	9	1
10mm door rope	10	1
Cast iron door	11	1
Brass handle assembly	12	1
Fire bar	13	1
Back verm. brick	14	2
Grate	15	1
Riddle grate	16	1
Ashpan	17	1
Riddle bar	18	1
Riddle bar knob	19	1
Air control knob	20	2
Air control bar	21	2
Left verm. side brick	22	1
Air slider plate	23	2
Brass hinge assembly	24	1
Direct air kit	25	1
Back heat shield	26	1

8) WARRANTY

5 Years – Your warranty covers replacement of the stove body if it is found to be defective within 5 years of purchase. Refitting and shipping costs are not covered.

1 Year – Bottom grate, bottom grate support, cast iron air-wash, cast iron door, riddling bar, air control bars, fire bars, ashpan, flue collar & cover and handle.

Not Covered

- Glass, glass clips, rope seals, baffle plate, left/ right/ back/ baffle bricks. Any other parts aren't covered by warranty.
- Defects or faults caused by local conditions such as draught problems and chimney defects.
- Damage caused by over firing.
- Damage resulting from the use of unsuitable fuel.

Unauthorised modifications, misuse, neglect, abuse, excessive wear and tear and the use of non-original replacement parts will invalidate the warranty of the stove

---

Should you require any further information or wish to view our other products available, please view at www.mazonastoves.com.

All rights reserved. Material contained in this publication may not be reproduced in whole or in part, without prior permission in writing from Micon Distribution Ltd.

Imported and Distributed by Micon Distribution Ltd.
1a Hallstown Road, Ballinderry Upper, Lisburn BT28 2NE
Mazona Brand exclusively owned by Micon

WARRANTY CLAIM FORM

PLEASE ENSURE ALL MANDATORY SECTIONS (*) ARE CORRECTLY COMPLETED OR WE WILL NOT BE ABLE TO PROCESS YOUR CLAIM

Customer name*	
Customer Address*	
Post Code*	
Date*	
Contact Number(s)*	
Retailer Name*	
Retailer Contact*	
Date of Purchase	
Type of fuel used*	
Problem reported*	
Comments	
Date of Installation*	
Installers name*	
Installers contact number*	
Building Control Certificate Number	

Customer Signature:* **Date:***